# PUMP STATION AND FORCE MAIN STANDARD DETAILS


GENERAL

PS-0.0 GENERAL NOTES
PS-0.1 GENERAL NOTES (CONTINUED)

DUPLEX SUBMERSIBLE PUMP STATION

PS-1.0 STATION SITE PLAN
PS-1.1 STATION SITE PLAN NOTES
PS-1.2 WET WELL - VALVE PIT PLAN VIEW
PS-1.3 WET WELL - VALVE PIT SECTION VIEW
PS-2.0 BYPASS CONFIGURATION

ELECTRICAL

PS-3.0 STATION ELECTRICAL PLAN
PS-3.1 FOUNDATION PLAN
PS-3.2 CANOPY ROOF PLAN
PS-3.3 SLAB SECTION
PS-3.4 EQUIPMENT RACK FRONT
PS-3.5 EQUIPMENT RACK BACK
PS-3.6 JUNCTION BOX
PS-3.7 ELECTRICAL DIAGRAM

GENERAL DETAILS

PS-4.0 WET WELL AND VALVE PIT PENETRATION SEAL
PS-5.0 FENCE WITH DOUBLE GATE
PS-6.0 WATER SPIGOT W/BOX
PS-6.1 BACKFLOW PREVENTER - WATER SERVICE
PS-7.0 SIGNAGE
PS-8.0 HEAVY DUTY PAVEMENT SECTION
PS-9.0 MECHANICAL JOINT RESTRAINTS
PS-10.0 FORCE MAIN PIPE EMBEDMENT C-900/DIP
PS-10.1 FORCE MAIN PIPE EMBEDMENT C-900/DIP - UNSTABLE SOIL OR ROCK
PS-11.0 AIR / VACUUM RELEASE VALVE
PS-12.0 FORCE MAIN CONNECTION - RECEIVING MANHOLE
PS-13.0 TRACER WIRE BOX
PS-14.0 PANEL DETAIL
PS-14.1 PANEL DETAIL


## LEGEND


MetroConnects
Sustainable Wastewater Solutions

Metropolitan Sewer Subdistrict
120 Augusta Arbor Way
Greenville, South Carolina
864-277-4442
metroconnects.org



Revision Date: January 1, 2023

1. ALL HINGES, GUIDE RAILS, CHAIN HOLDERS, CHAIN, CABLE, NUTS, BOLTS, WASHERS, OTHER FASTENERS, AND ANY EQUIPMENT THAT MAY ENTER THE WET WELL SHALL BE 316 STAINLESS STEEL.

2. ALL ELECTRICAL ENCLOSURES SHALL BE CONSTRUCTED OF 316 STAINLESS STEEL.

3. ALL PIPING SHALL BE PRESSURE CLASS 350 DUCTILE IRON PIPE AND ALL FITTINGS SHALL BE CLASS 160 DUCTILE IRON. ALL PIPE AND FITTINGS SHALL CONFORM TO TENEMEC PERMASHIELD 431 FOR INTERNAL LINING. PIPE AND FITTINGS THAT ARE LOCATED ABOVE GRADE ARE TO BE PAINTED CONFORMING TO TENEMEC SPECIFICATIONS. PIPING AND FITTINGS INSIDE OF THE WET WELL SHALL BE EPOXY COATED WITH APPROVED HYDROGEN SULFIDE PROTECTIVE COATING. ALL ABOVE GRADE PIPE TO BE CLEAN DUCTILE IRON WITH NO ASPHALTIC EXTERNAL COATING. ALL PIPE AND FITTINGS THAT ARE BURIED SHALL HAVE A BITUMASTIC EXTERNAL COATING.

4. EACH DISCHARGE LINE SHALL BE EQUIPPED WITH FITTINGS, PETCOCK AND A FOUR INCH (4") DIAMETER GLYCERIN-FILLED PRESSURE GAUGE AND DIAPHRAGM. THE GAUGE SHALL HAVE READINGS IN FT. AND PSI, AND THE NORMAL OPERATING PRESSURE FOR THE PUMPS SHALL FALL IN THE MIDDLE OF THE MEASUREMENT RANGE. FITTINGS, PETCOCKS, GAUGE DIAPHRAGM AND GAUGE SHALL BE STAINLESS STEEL.

5. ALL WET WELL HARDWARE SHALL BE MOUNTED SUCH THAT ANY COMPONENT MAY BE REMOVED.

6. WET WELL SECTIONS SHALL CONFORM WITH ASTM C-478 AND BE OF O-RING TYPE. ALL EXPOSED CONCRETE WITHIN THE WET WELL SHALL RECEIVE A HYDROGEN SULFIDE INHIBITING COATING, SHERWIN-WILLIAMS DURA-PLATE 6100, RAVEN 405 OR METRO APPROVED EQUAL. MANHOLE(S) DIRECTLY UPSTREAM FROM PUMP STATION SHALL BE COATED WITH SHERWIN-WILLIAMS DURA-PLATE 6100, RAVEN EPOXY 405 PROTECTIVE LINER OR METRO APPROVED EQUAL.

7. THE ELECTRIC METER SHALL BE INSTALLED WITH A FUSED DISCONNECT AND IN SUCH A MANNER THAT THE METER MAY BE READ WITH OUT ENTERING THE FENCED AREA.

8. A WEATHERPROOF BREAKER PANEL SHALL BE PROVIDED. THE PANEL SHALL HAVE SPACE FOR 6 SINGLE POLE BREAKERS.

9. AN EXTERNAL DRY TRANSFORMER SHALL BE PROVIDED FOR 460V STATIONS, TO PROVIDE POWER TO NOTE 8 ABOVE.

10. SECURITY LIGHTS SHALL BE PROVIDED FOR THE STATION. THE LIGHTS SHALL BE LED AND MUST ADEQUATELY ILLUMINATE THE CONTROL PANEL AND WET WELL HATCH.

11. A SCADA HIGH TIDE SYSTEM SHALL BE INSTALLED. THE SYSTEM SHALL BE INSTALLED PER SCADA SPECS..

12. ALL GROUND ROD CONNECTIONS SHALL BE CAD WELDED. ALL GROUND ROD CONNECTIONS ARE TO BE INSPECTED BY METRO PRIOR TO BURIAL.

13. THE EXCAVATION FOR THE WET WELL CONSTRUCTION SHALL BE BACKFILLED WITH SELECT FILL MATERIAL OR ROCK AND COMPACTED IN 6" LIFTS TO 95% MODIFIED PROCTOR. CONTRACTOR TO SUPPLY COMPACTION TESTS UNDER AND ALONGSIDE OF WET WELL AND VALVE PIT.

14. ALL POWER CABLES ARE TO BE ONE CONTINUOUS WIRE FROM THE PUMP MOTOR TO THE JUNCTION BOXES AND FROM JUNCTION BOXES TO MOTOR STARTER WITH NO SPLICES.

15. STAINLESS STEEL KELLUMS GRIPS SHALL BE INSTALLED ON POWER CABLES FOR THE PUMPS SO AS TO ADEQUATELY SUPPORT THE CABLES TO PREVENT FALLING AND BEING PULLED INTO THE PUMP WHEN RUNNING. MULTIPLE GRIPS/LOCATIONS MAY BE REQUIRED PER PUMP.

16. PUMPS SHALL BE ABS OR APPROVED EQUAL.

17. ALL ABOVE GRADE CONDUIT SHALL BE ALUMINUM OR 316 STAINLESS STEEL.

18. PUMPS AND MOTORS SHALL HAVE STAINLESS STEEL CHAIN FOR LIFTING. THE LENGTH OF THE CHAIN SHALL REACH THE TOP OF THE WET WELL PLUS SEVEN FEET (7'). A COMBINATION OF S.S. CHAIN AND S.S. WIRE ROPE MAY BE UTILIZED AS LONG AS THE BOTTOM SIX FEET (6') IS CHAIN. ALL COMPONENTS THAT MAKE UP THE FITTING ASSEMBLY SHALL BE RATED FOR OVERHEAD USE.

# GENERAL NOTES

19. ALL METAL STRUCTURES SHALL BE GROUNDED, INCLUDING BUT NOT LIMITED TO THE CONTROL PANEL AND GENERATOR PER METRO GROUNDING SPECIFICATIONS.

20. A METAL PLATE SIGN SHALL BE PROVIDED THAT DISPLAYS THE EMERGENCY PHONE NUMBERS AND FACILITY NUMBER. A METAL PLATE SIGN SHALL BE PROVIDED THAT DISPLAYS THE SITE ADDRESS.

21. WHEN APPLICABLE, TOSHIBA FLOW METER SHALL BE PLACED DOWNSTREAM OF THE TEE ON THE DISCHARGE PIPING IN VALVE PIT. FLOW METER SHALL BE INSTALLED PER MANUFACTURER'S SPACING REQUIREMENTS. INSTALL STAINLESS STEEL/ALUMINUM SUN SHADING/PROTECTION.

22. STAINLESS STEEL HOOKS SHALL BE PROVIDED ON EACH SIDE OF THE WET WELL HATCH OPENING FOR HANGING POWER CABLES FOR EACH PUMP.

23. ALL WET WELL AND VALVE PIT PIPE PENETRATIONS TO USE LINK-SEAL SEALS MODEL C+S-316 OR APPROVED EQUAL.

24. **REFER TO THE "SANITARY SEWER STANDARDS AND PROCEDURES - STANDARD TECHNICAL SPECIFICATIONS JANUARY 2021, DIVISION 4 - PUMP STATION AND FORCE MAIN" FOR APPROVED PARTS AND MATERIALS.**

# GENERAL NOTES (CONTINUED)

SEE PS-1.1 STATION SITE PLAN NOTES

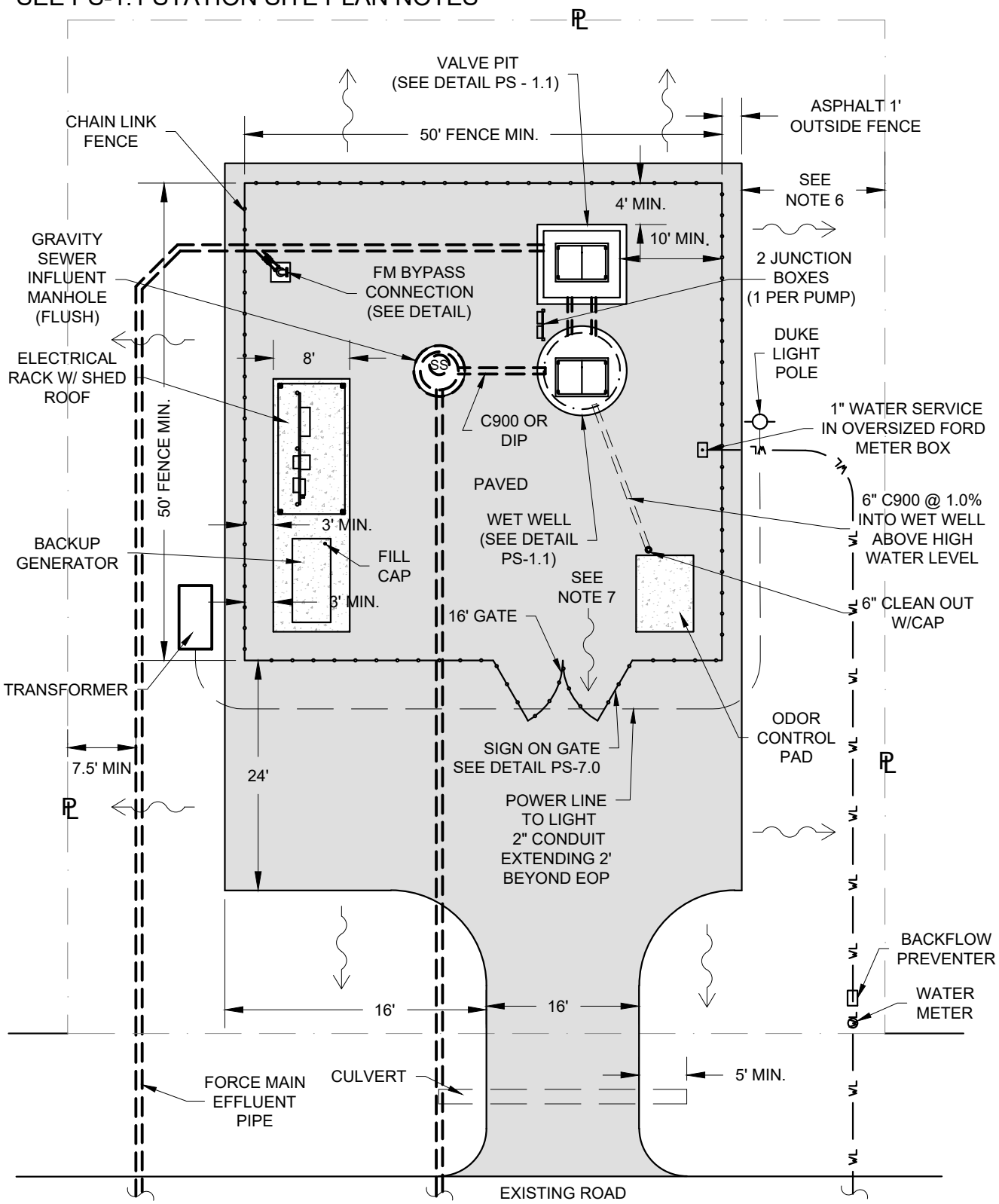


NTS

# STATION SITE PLAN


MetroConnects
Sustainable Wastewater Solutions

Metropolitan Sewer Subdistrict
120 Augusta Arbor Way
Greenville, South Carolina
864-277-4442
metroconnects.org


**PS-1.0**

Revision Date: January 1, 2023

NOTES:

1. DIMENSIONS AND LOCATIONS OF EQUIPMENT AND STRUCTURES MAY VARY DEPENDING ON SPECIFIC SITE CONDITIONS AND EQUIPMENT DESIGN. HOWEVER, MINIMUM CLEARANCES AND DIMENSIONS SHALL BE MAINTAINED.
2. HORIZONTAL AND VERTICAL SEPARATION OF UNDERGROUND UTILITIES SHALL COMPLY WITH DHEC REQUIREMENTS.
3. PUMP STATION WET WELL SHALL HAVE A MAXIMUM OF ONE (1) INFLUENT CONNECTION.
4. LANDSCAPING AND FENCING REQUIREMENTS PER ZONING.
5. ALL DIP TO BE LINED WITH TNEMEC 431 COATING.
6. BUFFER REQUIREMENTS PER PLANNING AND ZONING OR BZA (MIN. 15')
7. DRAINAGE REQUIREMENTS:
   - 7.1. PAVED AREA MUST HAVE A MINIMUM 2% SLOPE (5% MAXIMUM) DRAINING AWAY FROM WET WELL.
   - 7.2. POSITIVE DRAINAGE AWAY FROM EDGE OF PAVEMENT IN ALL DIRECTIONS REQUIRED.
   - 7.3. ENGINEER MUST SUBMIT DRAINAGE PLAN FOR DEVELOPMENT.
   - 7.4. DRAINAGE PLAN MUST BE APPROVED BY GREENVILLE COUNTY.

# STATION SITE NOTES

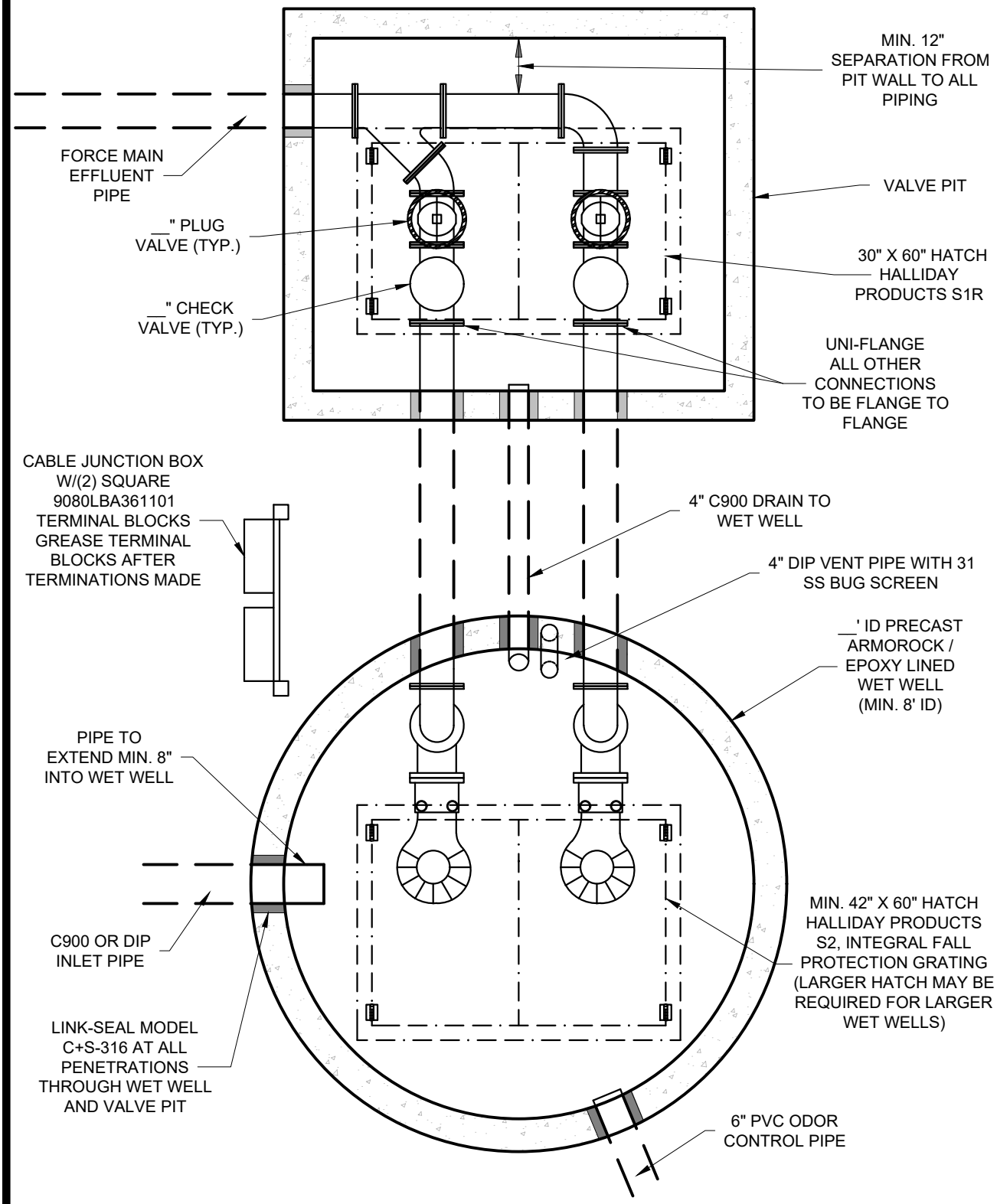


NTS

# WET WELL - VALVE PIT PLAN VIEW


MetroConnects
Sustainable Wastewater Solutions

Metropolitan Sewer Subdistrict
120 Augusta Arbor Way
Greenville, South Carolina
864-277-4442
metroconnects.org


**PS-1.2**

Revision Date: January 1, 2023

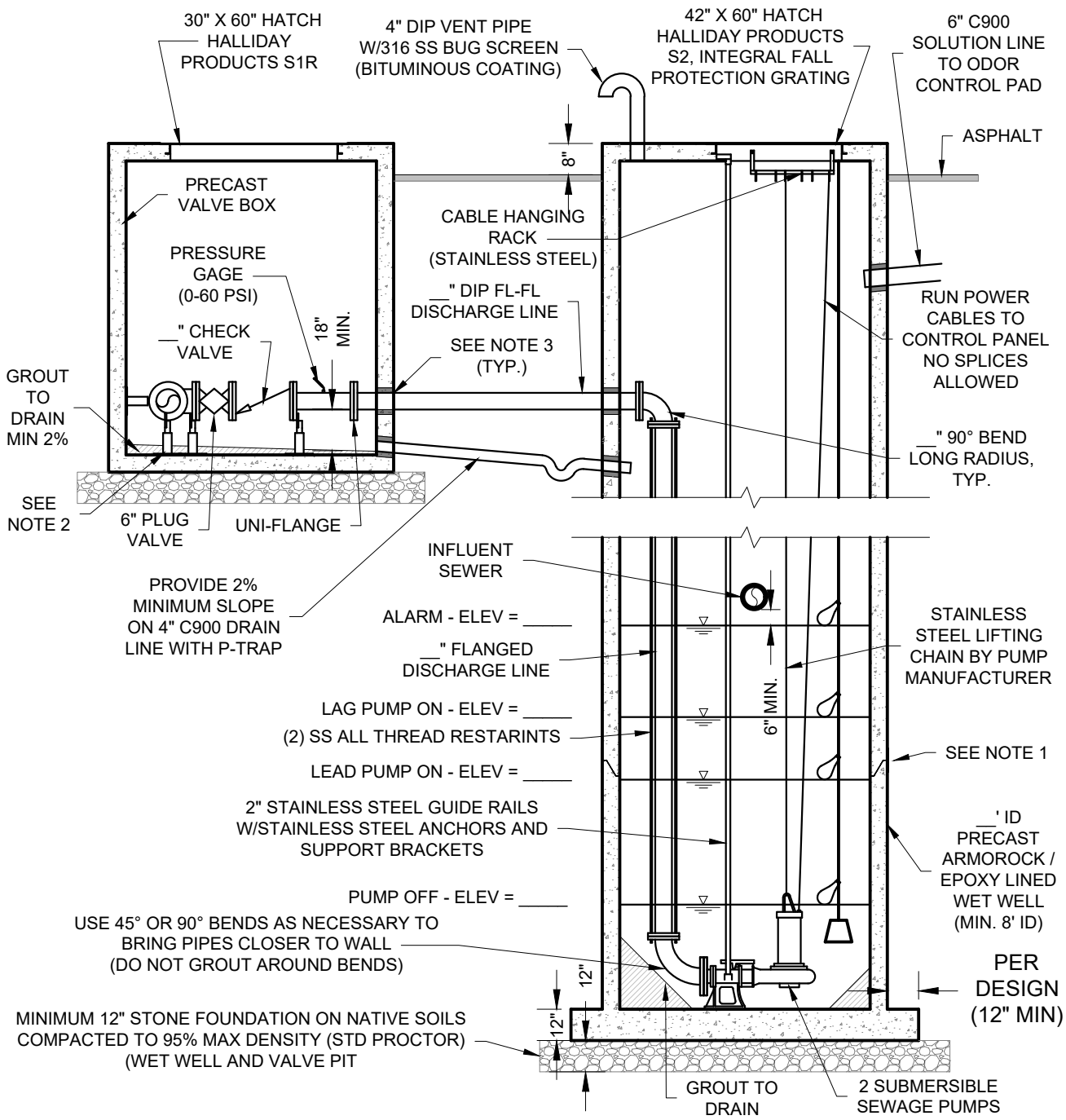


NOTES:

1. ALL WET WELL JOINTS WILL HAVE AN EXTERNAL 9" JOINT WRAP CENTERED ON JOINT. WRAP SHALL BE "HENRY COMPANY" MODEL RUB'R-NEK.
2. ALL SUPPORT BRACKETS IN VALVE PIT TO BE 304L STAINLESS STEEL.
3. ALL PIPE PENETRATIONS THROUGH WET WELL AND VALVE PIT SHALL UTILIZE LINK-SEAL SEALS - MODEL C+S-316 OR EQUAL.
4. ALL DIP TO BE LINED WITH TNEMEC 431 COATING.
5. ALL CONNECTIONS IN WET WELL AND VALVE PIT TO BE TRUE FLANGE TO FLANGE CONNECTIONS UNLESS OTHERWISE NOTED.

NTS

# WET WELL - VALVE PIT SECTION VIEW


MetroConnects
Sustainable Wastewater Solutions

Metropolitan Sewer Subdistrict
120 Augusta Arbor Way
Greenville, South Carolina
864-277-4442
metroconnects.org


**PS-1.3**

Revision Date: January 1, 2023

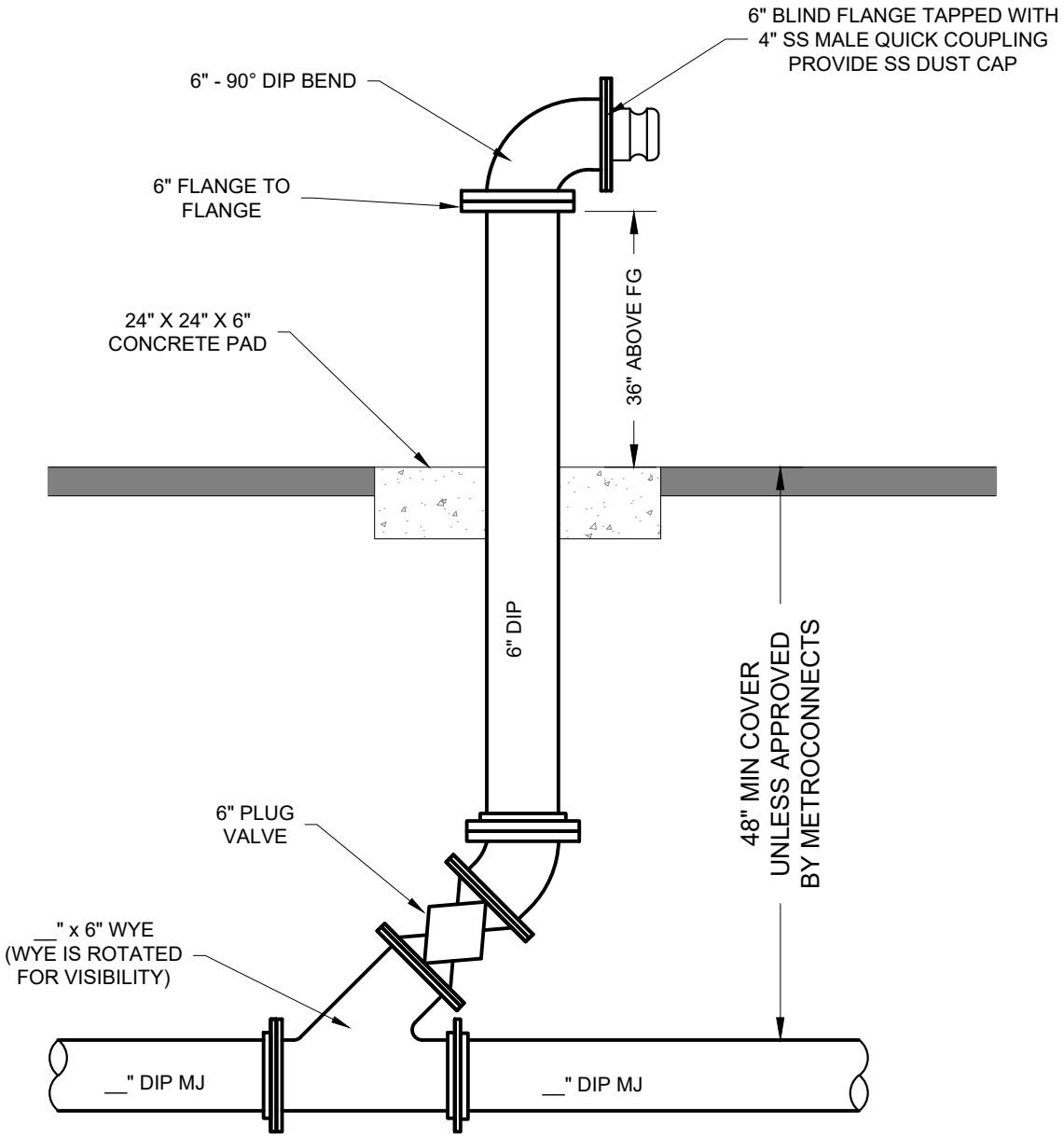


NOTES:

1. ALL DIP INTERIOR TO BE LINED WITH TNEMEC 431 COATING.

NTS

# BYPASS CONFIGURATION

MetroConnects
Sustainable Wastewater Solutions

Metropolitan Sewer Subdistrict
120 Augusta Arbor Way
Greenville, South Carolina
864-277-4442
metroconnects.org

**PS-2.0**

Revision Date: January 1, 2023

SEE PS-1.1STATION SITE PLAN NOTES

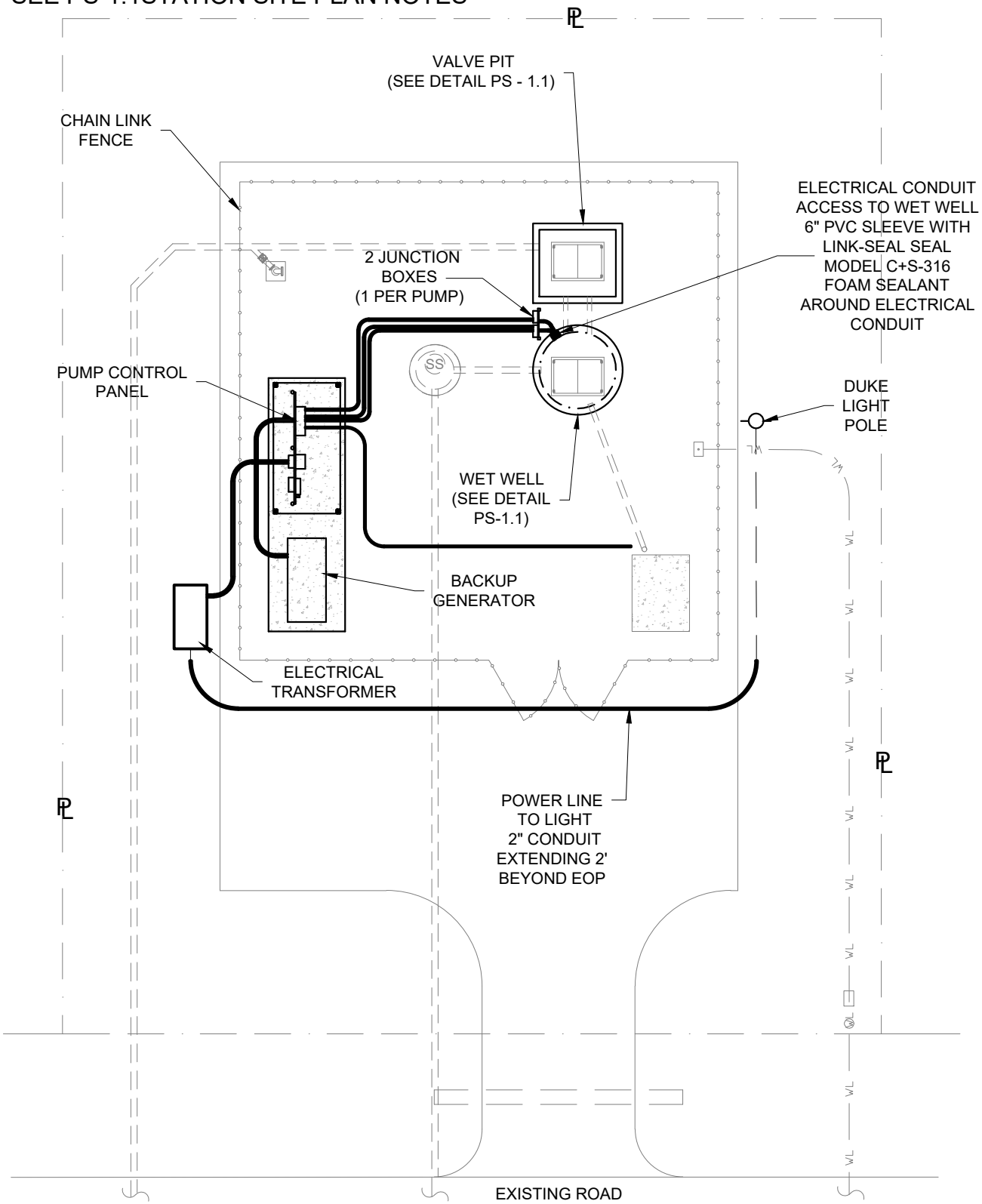


NTS

# STATION ELECTRICAL PLAN


MetroConnects
Sustainable Wastewater Solutions

Metropolitan Sewer Subdistrict
120 Augusta Arbor Way
Greenville, South Carolina
864-277-4442
metroconnects.org


**PS-3.0**

Revision Date: January 1, 2023

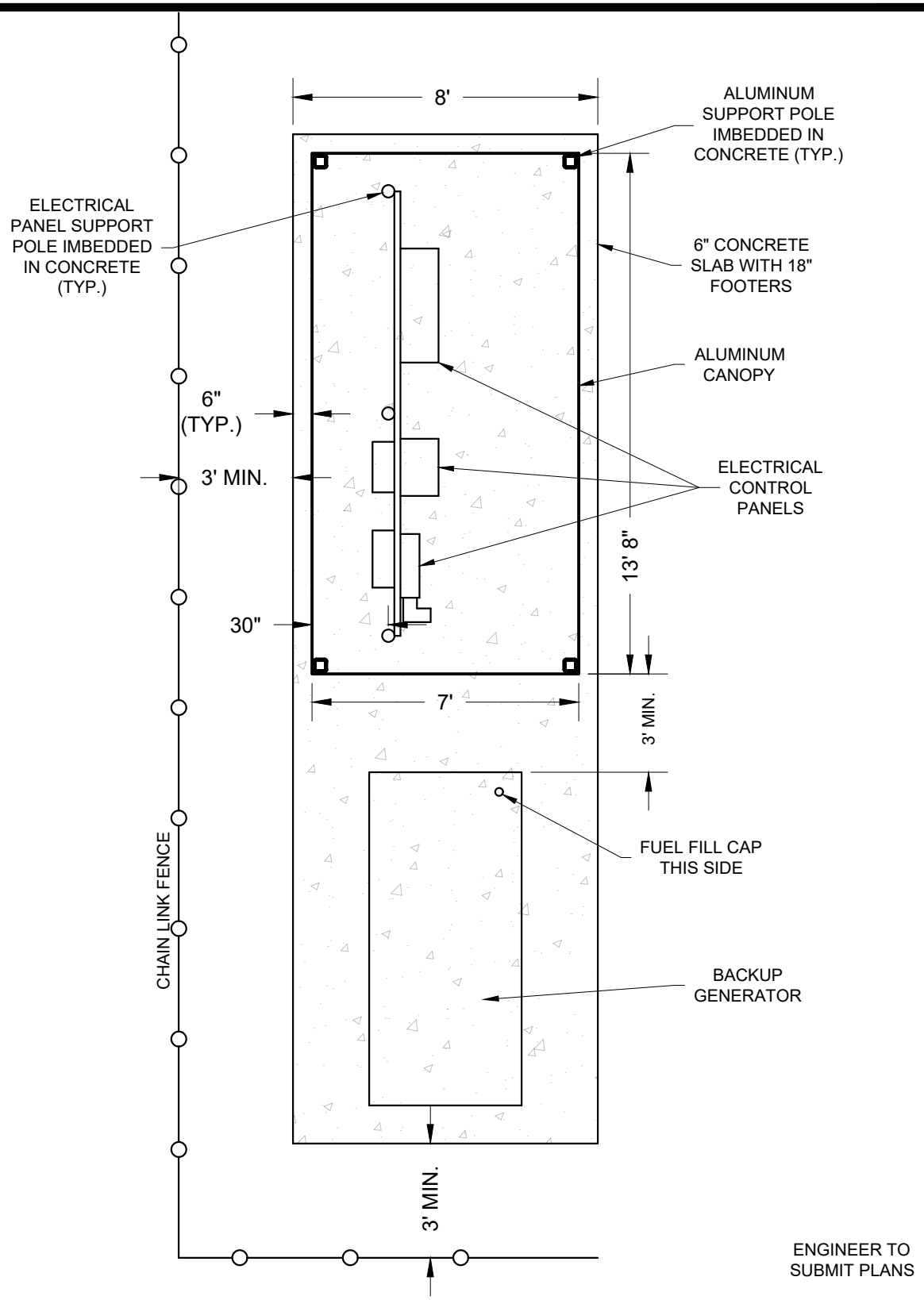


NTS

# FOUNDATION PLAN


MetroConnects
Sustainable Wastewater Solutions

Metropolitan Sewer Subdistrict
120 Augusta Arbor Way
Greenville, South Carolina
864-277-4442
metroconnects.org


**PS-3.1**

Revision Date: January 1, 2023

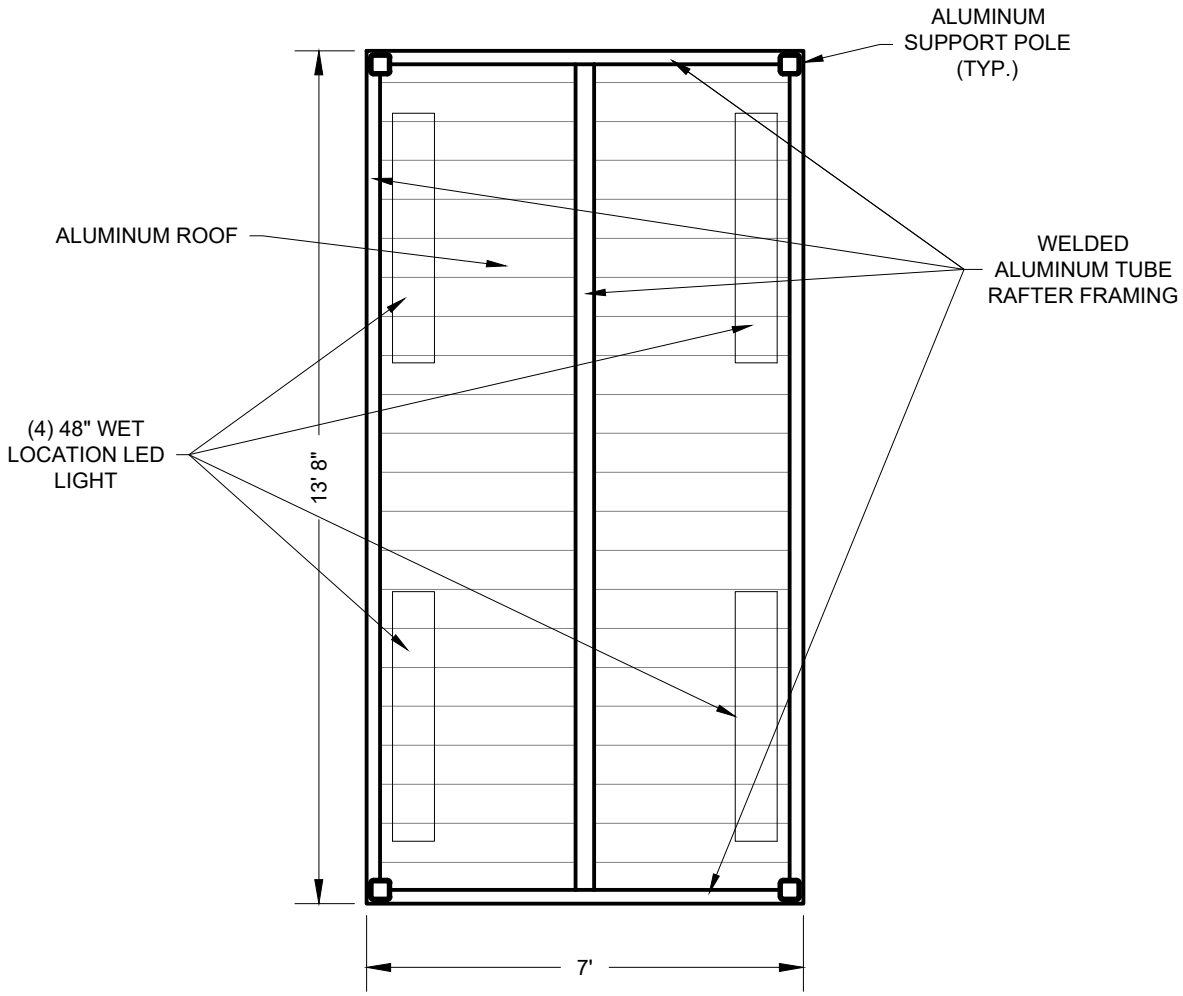


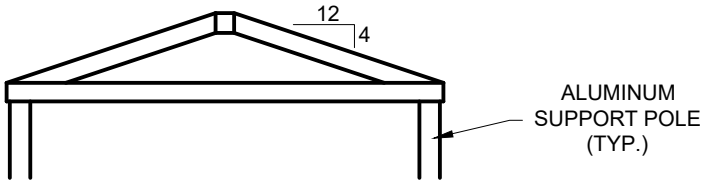


ENGINEER TO
SUBMIT PLANS

NTS

# CANOPY ROOF PLAN

MetroConnects
Sustainable Wastewater Solutions

Metropolitan Sewer Subdistrict
120 Augusta Arbor Way
Greenville, South Carolina
864-277-4442
metroconnects.org

**PS-3.2**

Revision Date: January 1, 2023

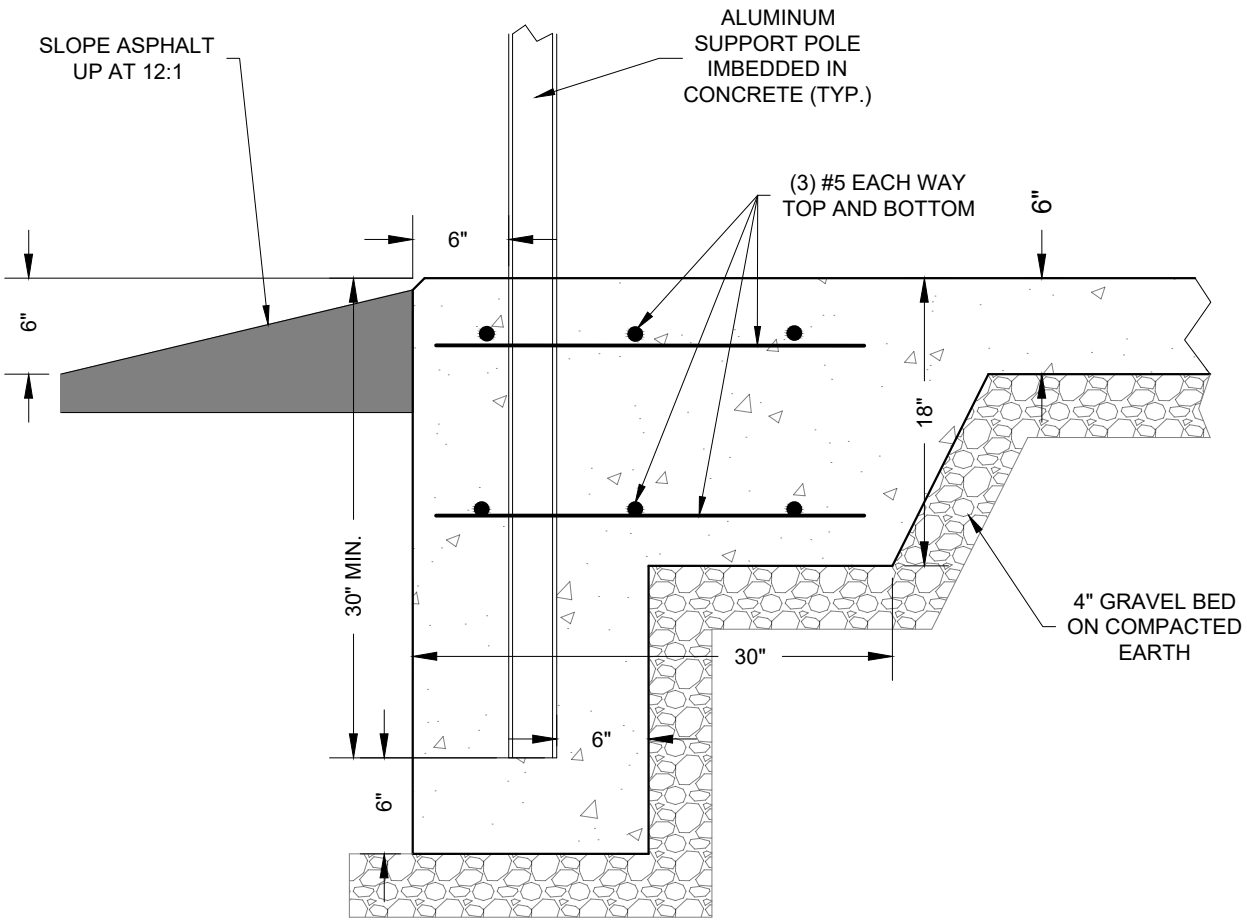


NTS

# SLAB SECTION

Metropolitan Sewer Subdistrict
120 Augusta Arbor Way
Greenville, South Carolina
864-277-4442
metroconnects.org

MetroConnects
Sustainable Wastewater Solutions

**PS-3.3**

Revision Date: January 1, 2023

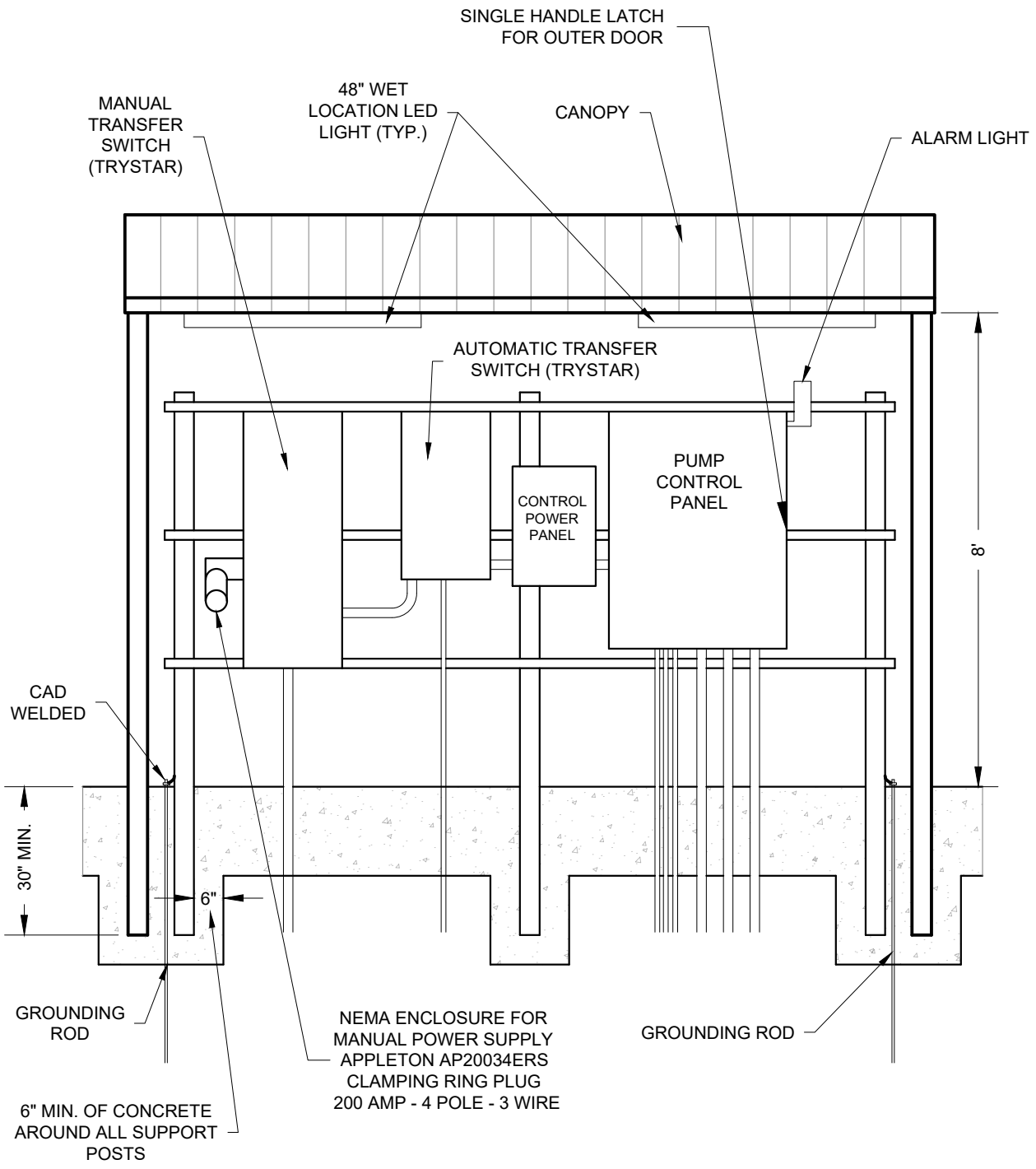


NTS

# EQUIPMENT RACK FRONT

MetroConnects
Sustainable Wastewater Solutions

Metropolitan Sewer Subdistrict
120 Augusta Arbor Way
Greenville, South Carolina
864-277-4442
metroconnects.org

**PS-3.4**

Revision Date: January 1, 2023

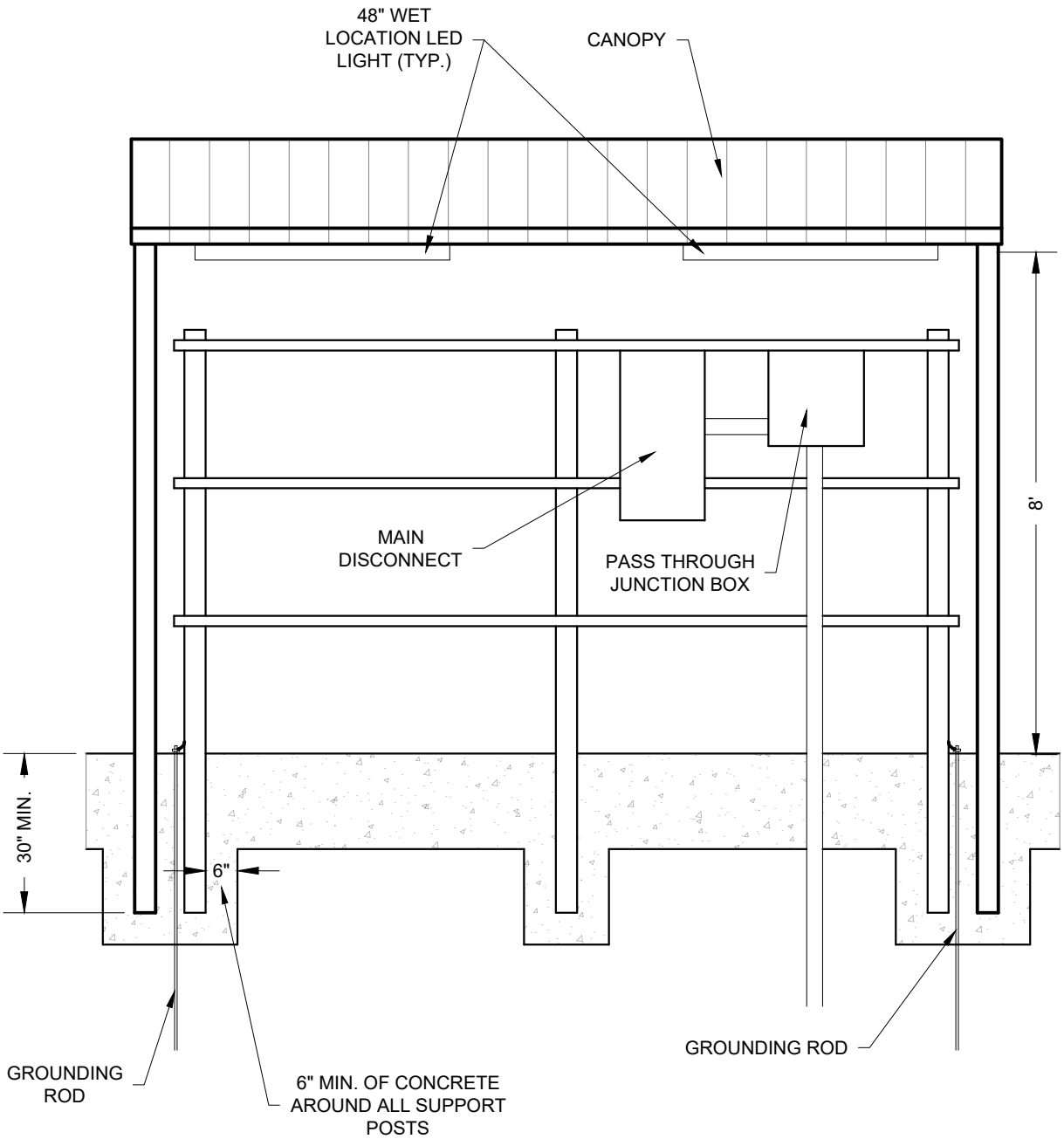


NTS

# EQUIPMENT RACK BACK

MetroConnects
Sustainable Wastewater Solutions

Metropolitan Sewer Subdistrict
120 Augusta Arbor Way
Greenville, South Carolina
864-277-4442
metroconnects.org

**PS-3.5**

Revision Date: January 1, 2023

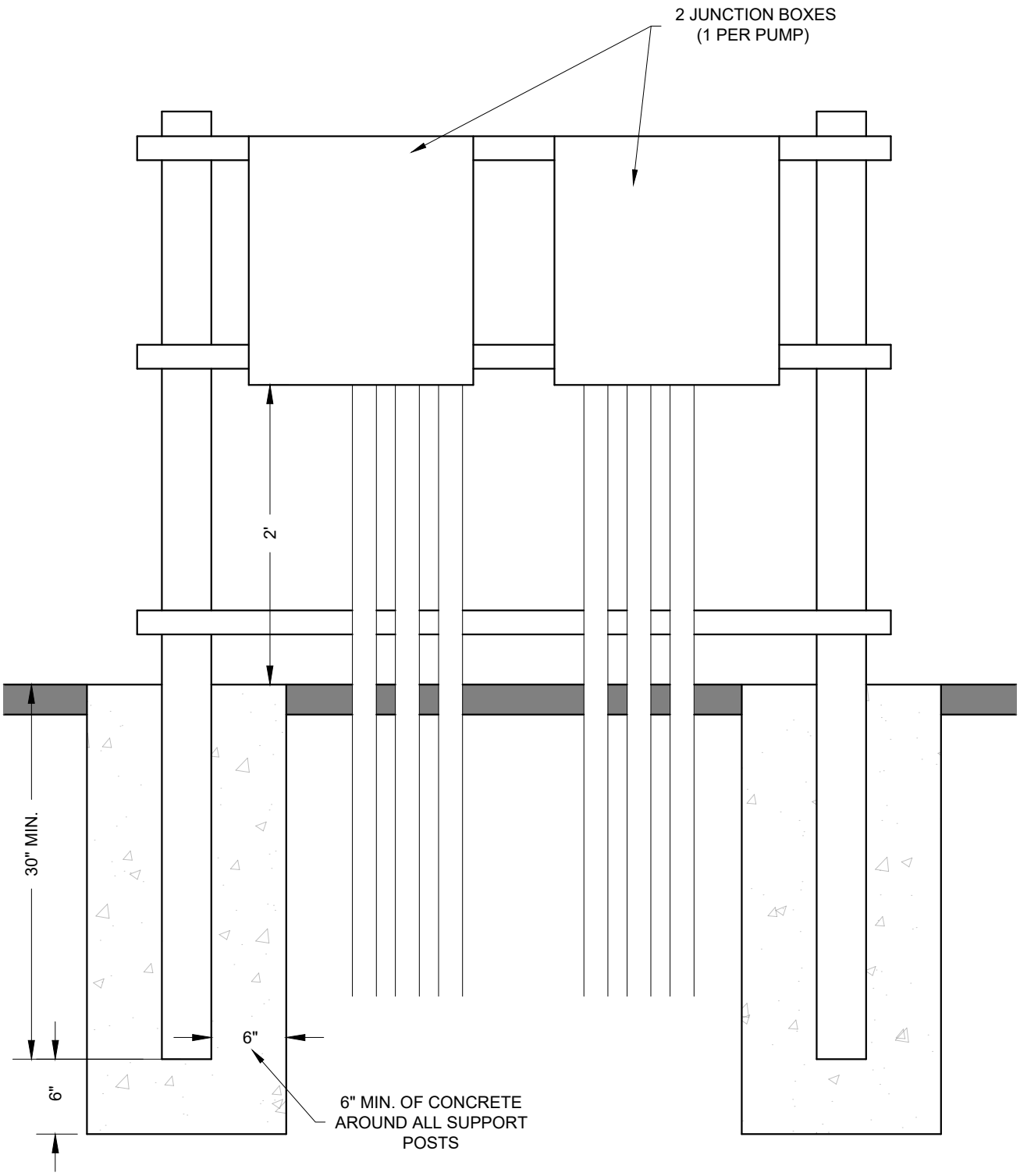


NTS

# JUNCTION BOX

MetroConnects
Sustainable Wastewater Solutions

Metropolitan Sewer Subdistrict
120 Augusta Arbor Way
Greenville, South Carolina
864-277-4442
metroconnects.org

**PS-3.6**

Revision Date: January 1, 2023

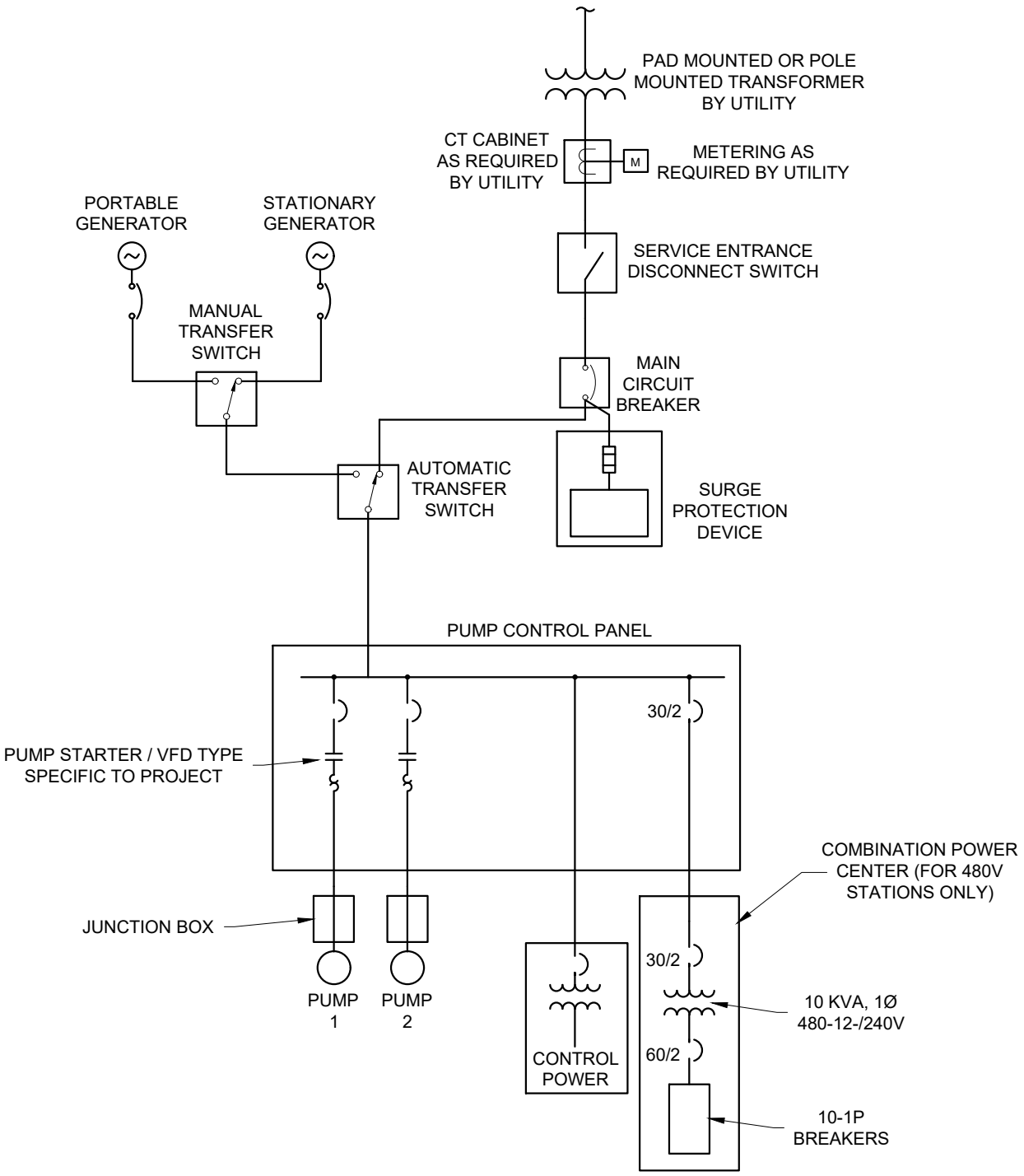


NTS

# ELECTRICAL DIAGRAM


MetroConnects
Sustainable Wastewater Solutions

Metropolitan Sewer Subdistrict
120 Augusta Arbor Way
Greenville, South Carolina
864-277-4442
metroconnects.org


**PS-3.7**

Revision Date: January 1, 2023

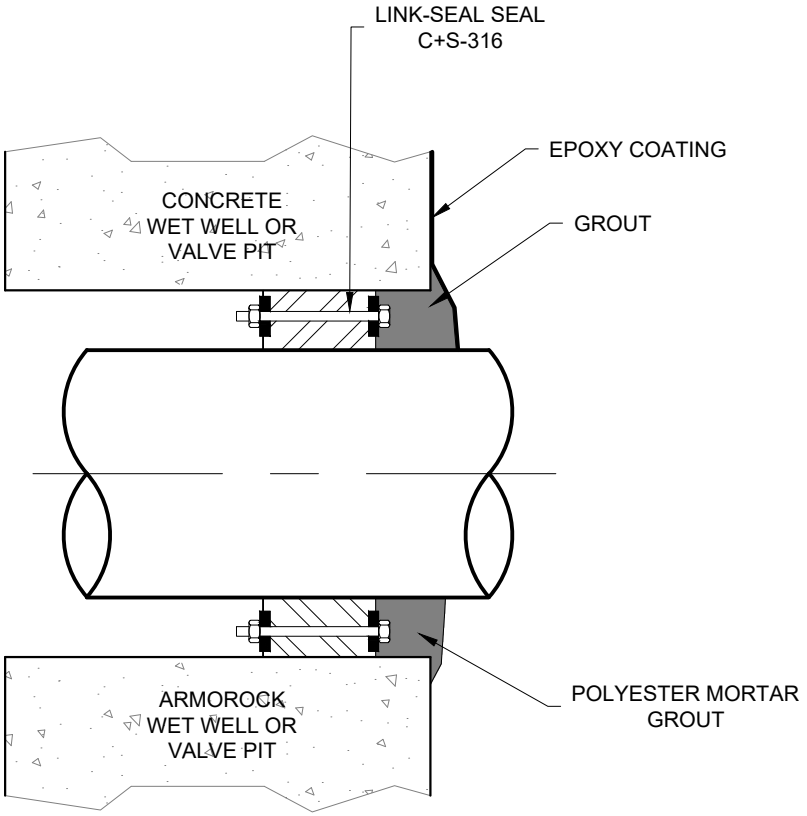


# WET WELL AND VALVE PIT PENETRATION SEAL

NTS

Metropolitan Sewer Subdistrict
120 Augusta Arbor Way
Greenville, South Carolina
864-277-4442
metroconnects.org

MetroConnects
Sustainable Wastewater Solutions

**PS-4.0**

Revision Date: January 1, 2023

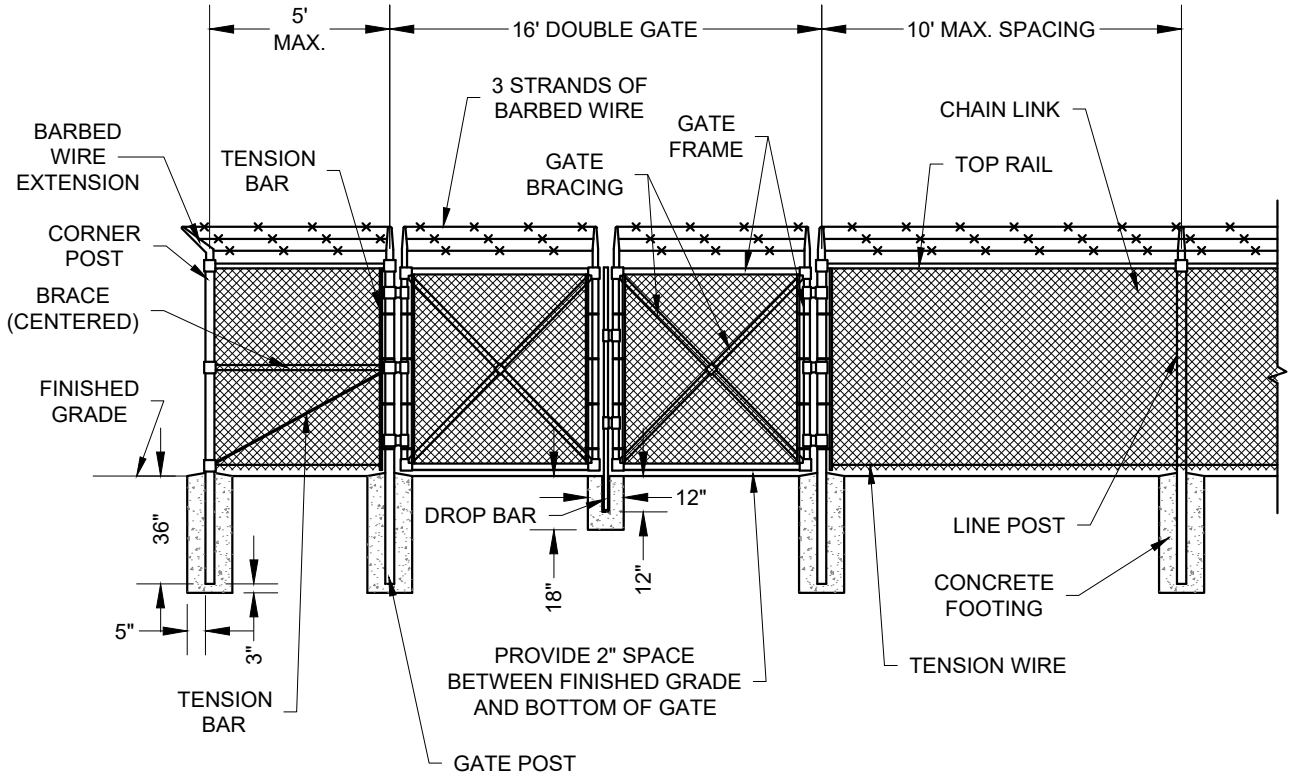


NOTES:
1. ALL FENCING MATERIAL TO BE GALVANIZED.
2. FENCE TO BE A MINIMUM OF 6' HIGH
3. BARBED WIRE EXTENSIONS TO BE 12" HIGH 3 STRAND.

NTS

# FENCE WITH DOUBLE GATE

MetroConnects
Sustainable Wastewater Solutions
Metropolitan Sewer Subdistrict
120 Augusta Arbor Way
Greenville, South Carolina
864-277-4442
metroconnects.org

**PS-5.0**

Revision Date: January 1, 2023

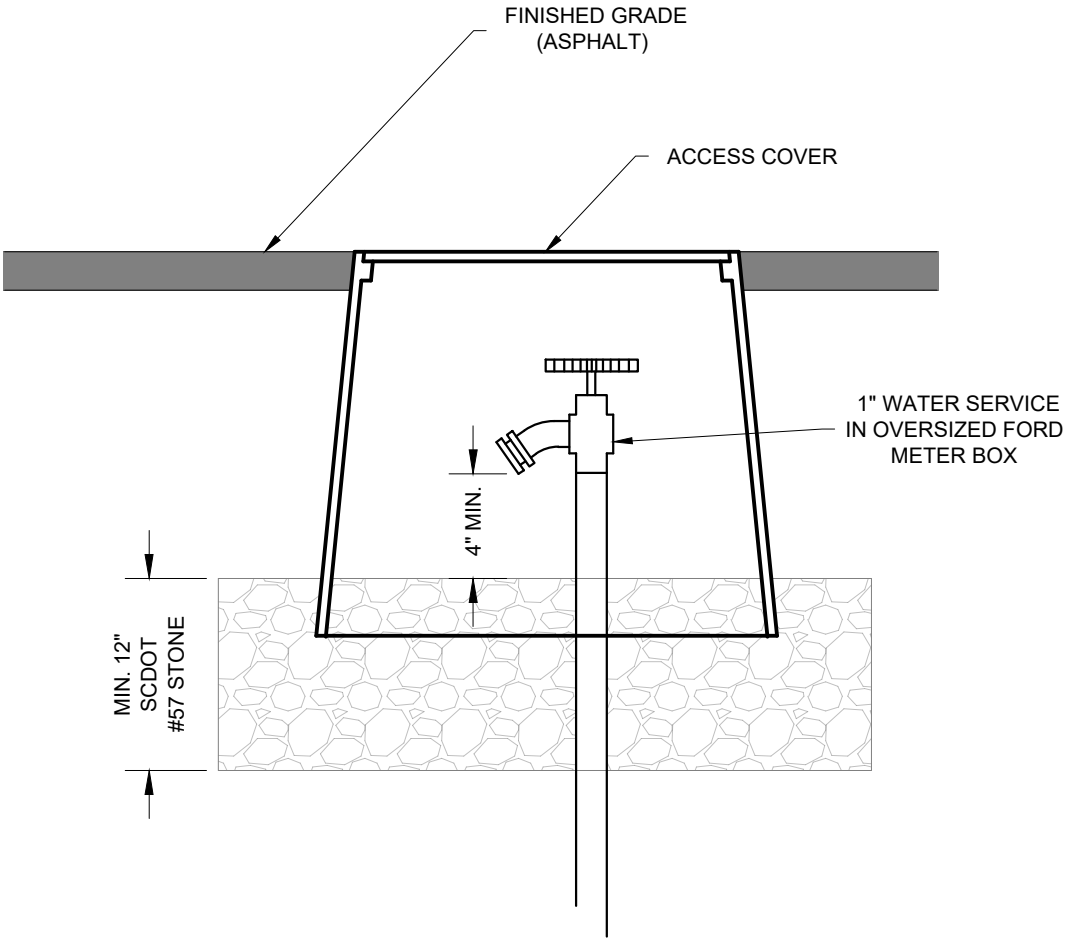


NTS

# WATER SPIGOT W/BOX

MetroConnects
Sustainable Wastewater Solutions

Metropolitan Sewer Subdistrict
120 Augusta Arbor Way
Greenville, South Carolina
864-277-4442
metroconnects.org

**PS-6.0**

Revision Date: January 1, 2023

Notes:
1. SPECIFIC REQUIREMENTS FOR WATER METER AND BACKFLOW PREVENTER MAY VARY BY WATER DISTRICT. REFER TO WATER DISTRICT DESIGN STANDARDS.

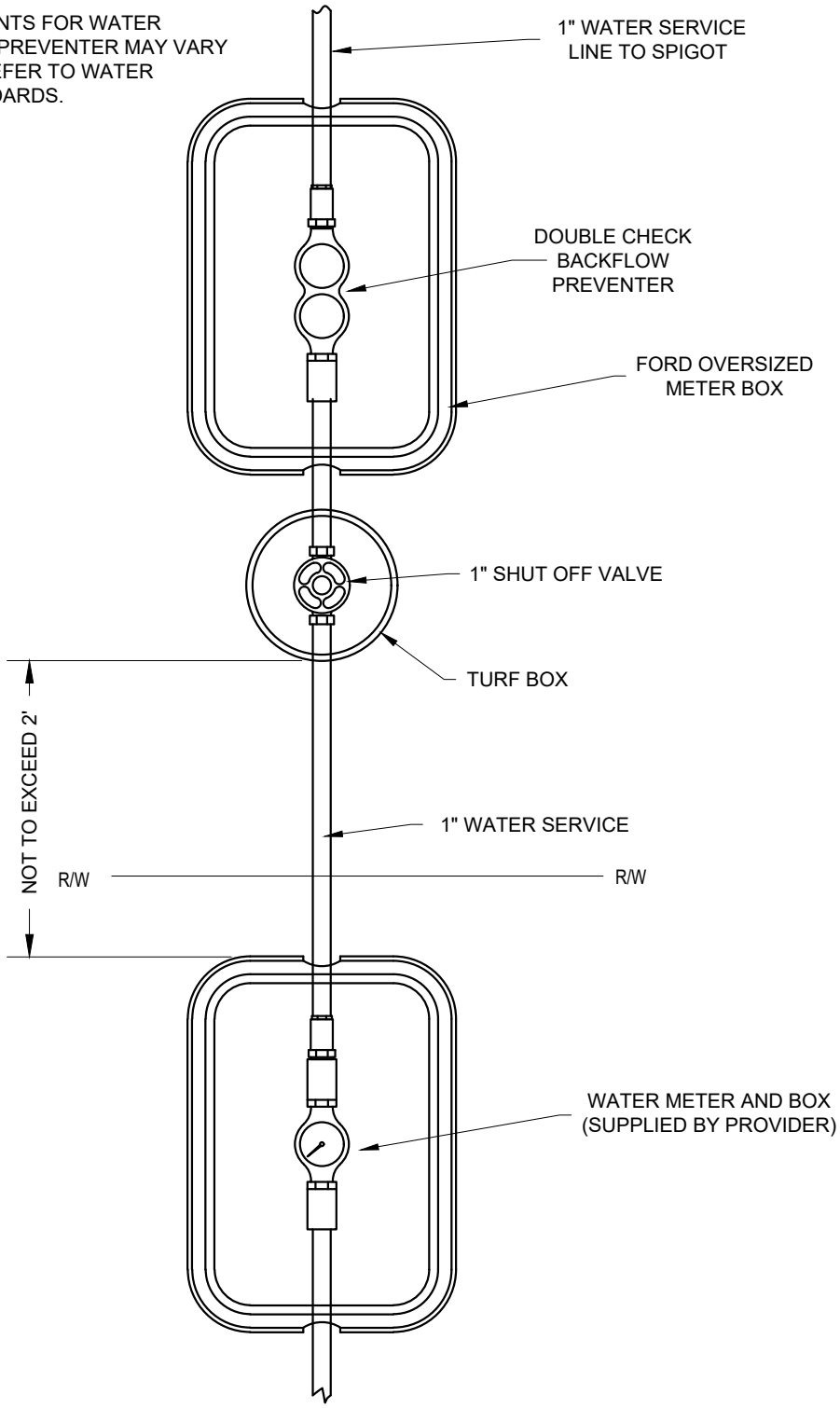


# BACKFLOW PREVENTER AND WATER SERVICE

NTS


MetroConnects
Sustainable Wastewater Solutions

Metropolitan Sewer Subdistrict
120 Augusta Arbor Way
Greenville, South Carolina
864-277-4442
metroconnects.org


**PS-6.1**

Revision Date: January 1, 2023

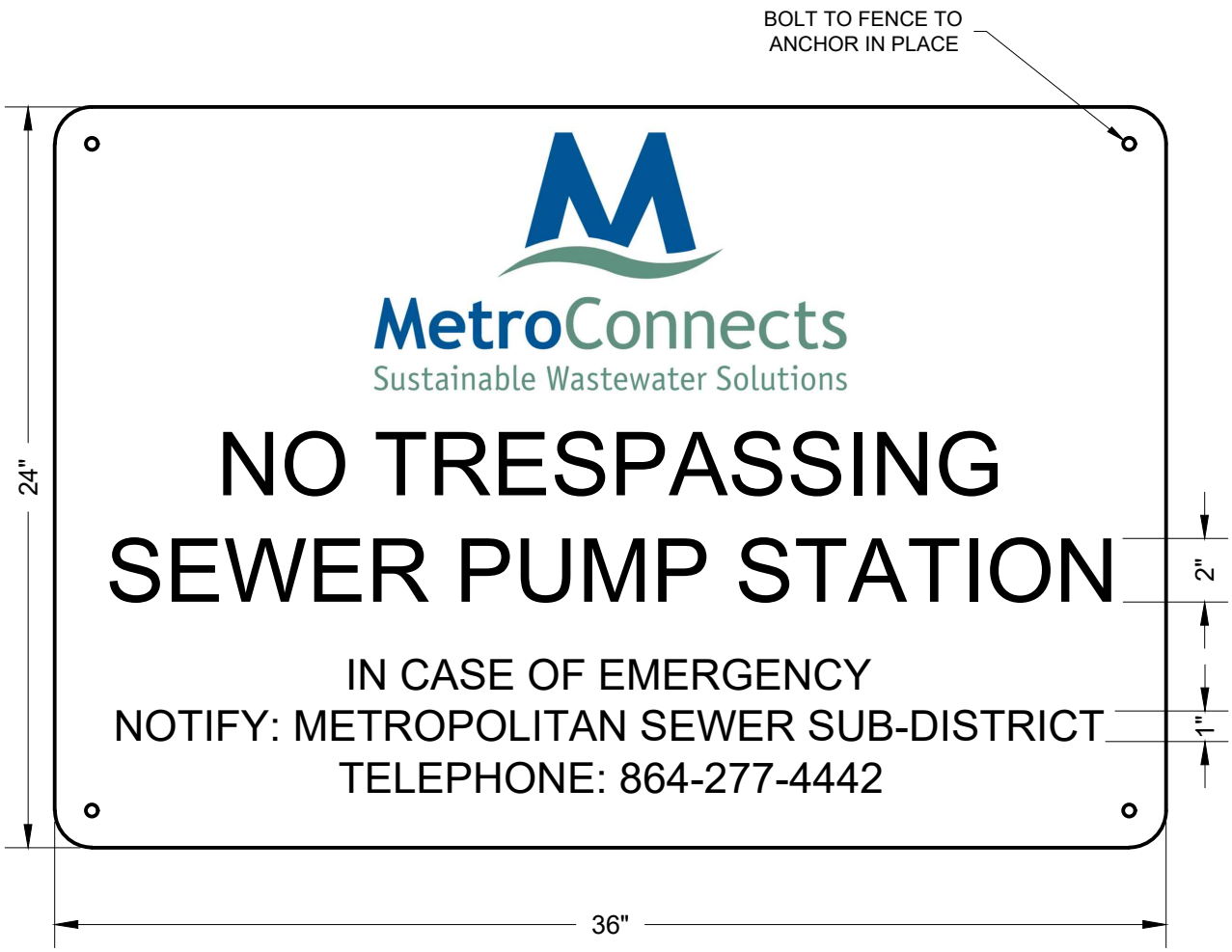


NOTES:
1. SIGN SHALL BE 16 GAUGE ALUMINUM WITH BLACK LETTERS ON A WHITE BACKGROUND.
2. MOUNT SIGN AT EYE LEVEL ON CHAIN LINK FENCE GATE.

NTS

# SIGNAGE

MetroConnects
Sustainable Wastewater Solutions
Metropolitan Sewer Subdistrict
120 Augusta Arbor Way
Greenville, South Carolina
864-277-4442
metroconnects.org

**PS-7.0**

Revision Date: January 1, 2023

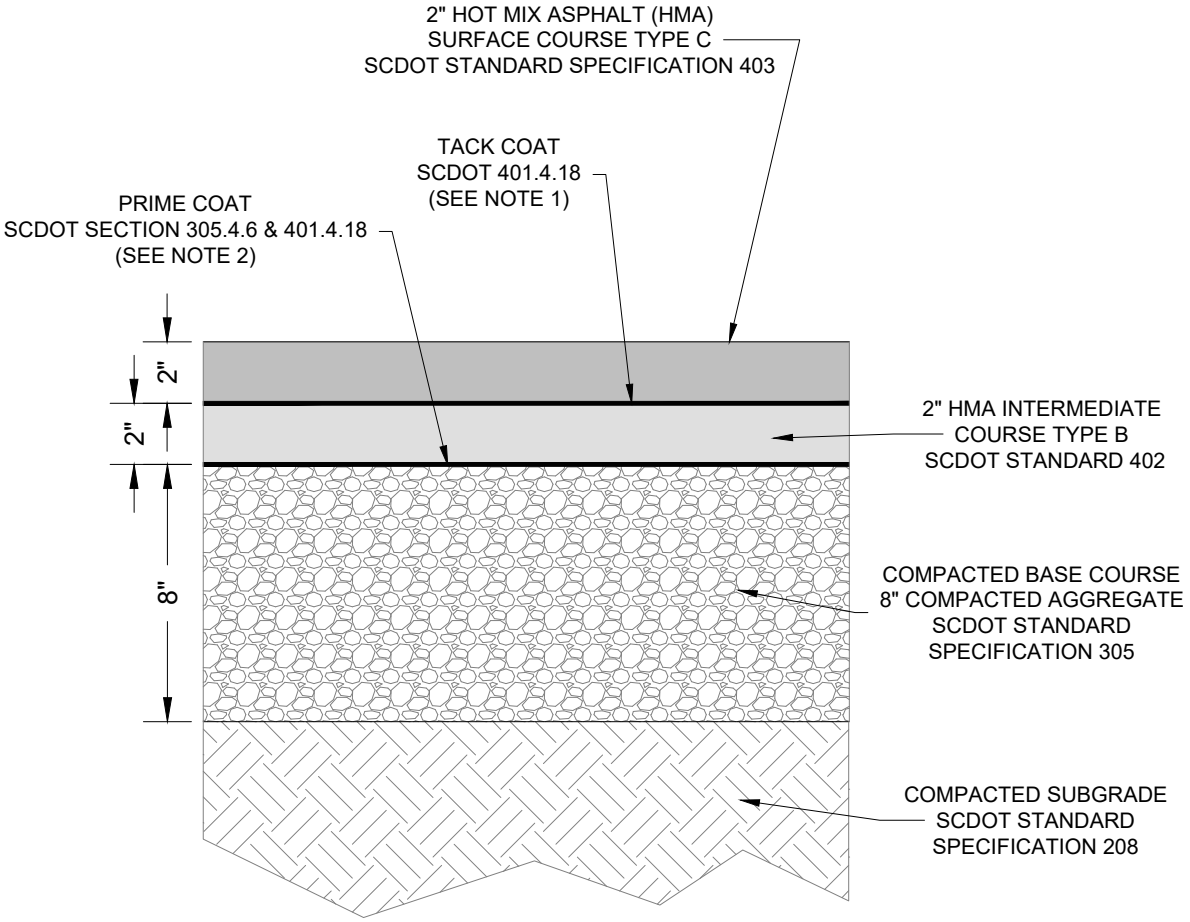


NOTES:

1. APPLICATION RATE FOR TACK COAT ON EXISTING PAVEMENTS SHALL BE 0.05 - 0.15 GAL PER SQUARE YARD.
2. APPLICATION RATE FOR PRIME COAT ON MACADAM AND RECYCLED PORTLAND CEMENT BASE COURSE SHALL BE 0.25 - 0.30 GAL PER SQUARE YARD.

NTS

# HEAVY DUTY PAVEMENT SECTION

MetroConnects
Sustainable Wastewater Solutions
Metropolitan Sewer Subdistrict
120 Augusta Arbor Way
Greenville, South Carolina
864-277-4442
metroconnects.org

**PS-8.0**

Revision Date: January 1, 2023

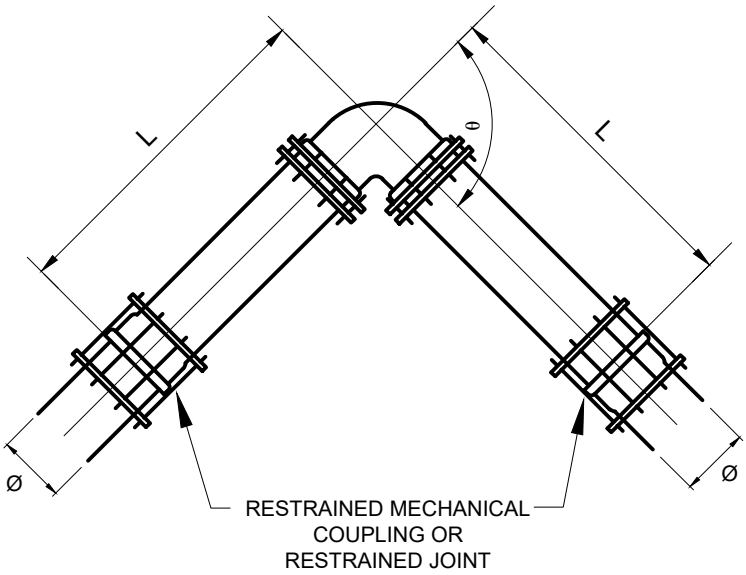


θ = DEFLECTION ANGLE
Ø = PIPE DIAMETER
L = RESTRAINED JOINT LENGTH

RESTRAINT JOINT TABLE
RESTRAIN ALL JOINTS WITHIN THESE LENGTHS
(IN L.F. EACH SIDE OF THE FITTING)

| SIZE | 11-1/4° | 22-1/2° | 45° | 90° | TEE BRANCH | DEAD END | REDUCER |
|---|---|---|---|---|---|---|---|
| 4" | 2 | 5 | 10 | 24 | 38 | 61 | 44 |
| 6" | 4 | 7 | 14 | 33 | 64 | 85 | 47 |
| 8" | 5 | 9 | 18 | 44 | 91 | 111 | 45 |
| 10" | 6 | 11 | 22 | 52 | 113 | 132 | 46 |
| 12" | 6 | 12 | 25 | 60 | 133 | 155 | 84 |
| 16" | 8 | 16 | 32 | 76 | 177 | 198 | 84 |

*RESTRAINED JOINTS SHALL BE IN ACCORDANCE WITH THE DUCTILE IRON PIPE RESEARCH ASSOCIATION (DIPRA) STANDARDS FOR ALL FITTINGS. FITTINGS OF OTHER SIZES, CHANGES IN CONDITIONS, ETC. NOT IN THIS TABLE SHALL BE IN ACCORDANCE WITH DIPRA STANDARDS.

NOTES:
1. THIS DETAIL DEPICTS A GENERAL CONFIGURATION FOR MECHANICALLY RESTRAINED JOINTS.
2. JOINT RESTRAINT SHALL BE PROVIDED FOR DEFLECTION ANGLES GREATER THAN OR EQUAL TO 22 1/2 DEGREES IN EITHER HORIZONTAL OR VERTICAL ORIENTATION. RESTRAINT SHALL ALSO BE PROVIDED AT PIPE END FITTINGS (CAPS OR PLUGS) AND VALVES, WHICH SHALL BE TREATED AS ENDS ON BOTH SIDES OF THE VALVE.
3. DESIGN ENGINEER SHALL PROVIDE RESTRAINED JOINT CALCULATIONS BASED ON DIPRA "THRUST RESTRAINT DESIGN FOR DUCTILE IRON PIPE", LATEST EDITION OR EBAA IRON RESTRAINT LENGTH CALCULATOR IRON PIPE", LATEST EDITION OR EBAA IRON RESTRAINT LENGTH CALCULATOR.
4. IF RESTRAINED LENGTHS FALL BETWEEN PIPE JOINTS, RESTRAINT SHALL BE EXTENDED TO THE NEXT PIPE JOINT FURTHEST FROM THE FITTING.
5. SEE STANDARD SPECIFICATIONS FOR MECHANICAL RESTRAINT DETAILS.

NTS

# MECHANICAL JOINT RESTRAINTS

MetroConnects
Sustainable Wastewater Solutions
Metropolitan Sewer Subdistrict
120 Augusta Arbor Way
Greenville, South Carolina
864-277-4442
metroconnects.org

**PS-9.0**

Revision Date: January 1, 2023

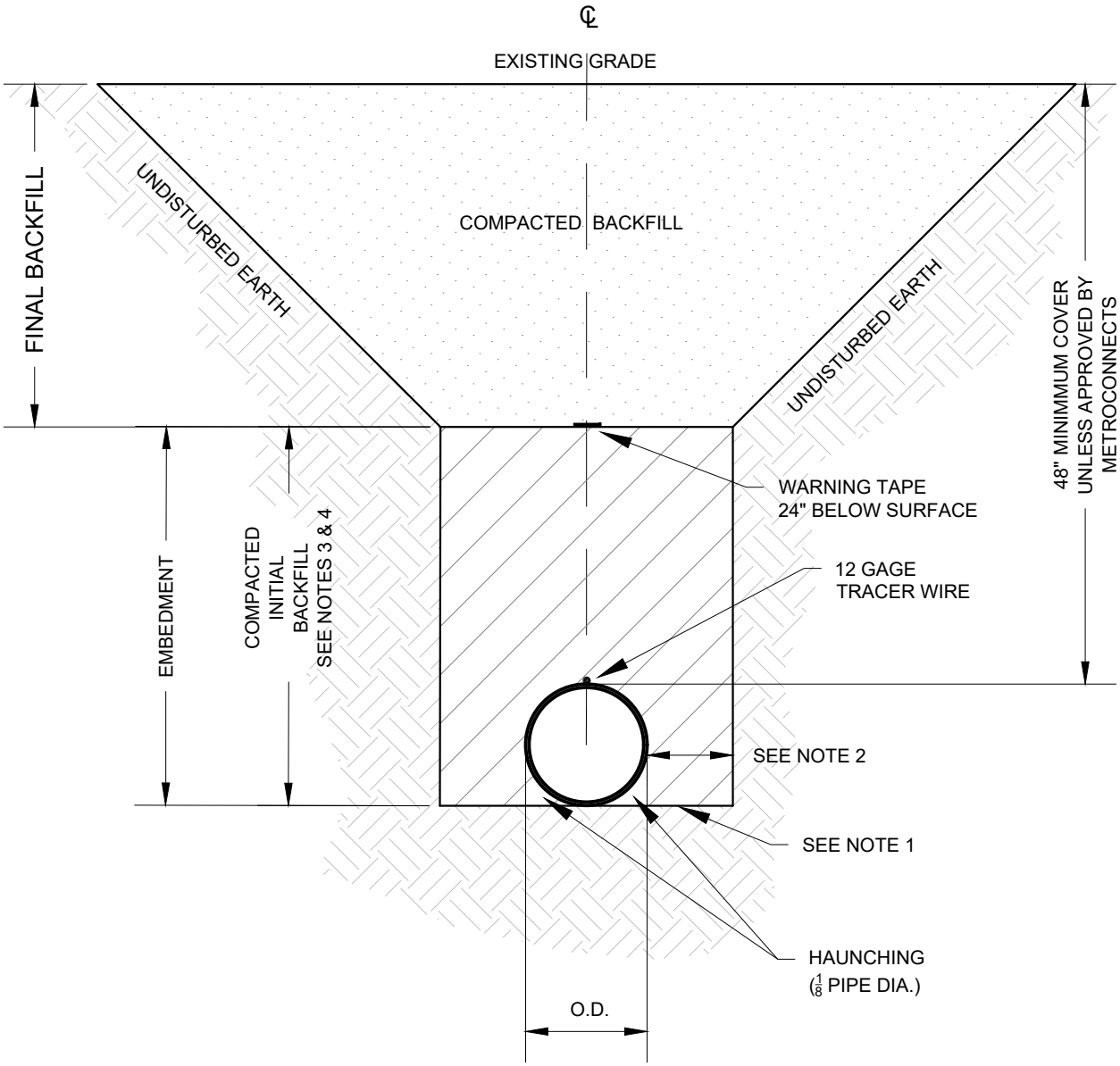


NOTES:

1. PIPE TO BE LAID ON UNDISTURBED SUITABLE SOIL. IF TRENCH IS CUT THROUGH ROCK OR UNSTABLE SOILS SEE DETAIL PS-10.1.
2. CLEAR DISTANCE NOT LESS THAN 6" EACH SIDE.
3. 18" MINIMUM VERTICAL TRENCH WALL ABOVE TOP OF PIPE.
4. INITIAL BACKFILL SHALL BE PLACED IN 6" LIFTS AND COMPACTED. INITIAL BACKFILL SHALL CONTAIN NO MATERIAL OVER 1 1/2" IN DIAMETER, FROZEN LUMPS, OR DEBRIS.
5. ALL TRENCHES WITHIN THE ROADWAY SHALL BE COMPACTED TO 95% OF STANDARD PROCTOR DENSITY AND ALL OTHER TRENCHES SHALL BE COMPACTED TO 90% OF STANDARD PROCTOR DENSITY.

NTS

# FORCE MAIN PIPE EMBEDMENT - C900 / DIP

MetroConnects
Sustainable Wastewater Solutions

Metropolitan Sewer Subdistrict
120 Augusta Arbor Way
Greenville, South Carolina
864-277-4442
metroconnects.org

**PS-10.0**

Revision Date: January 1, 2023

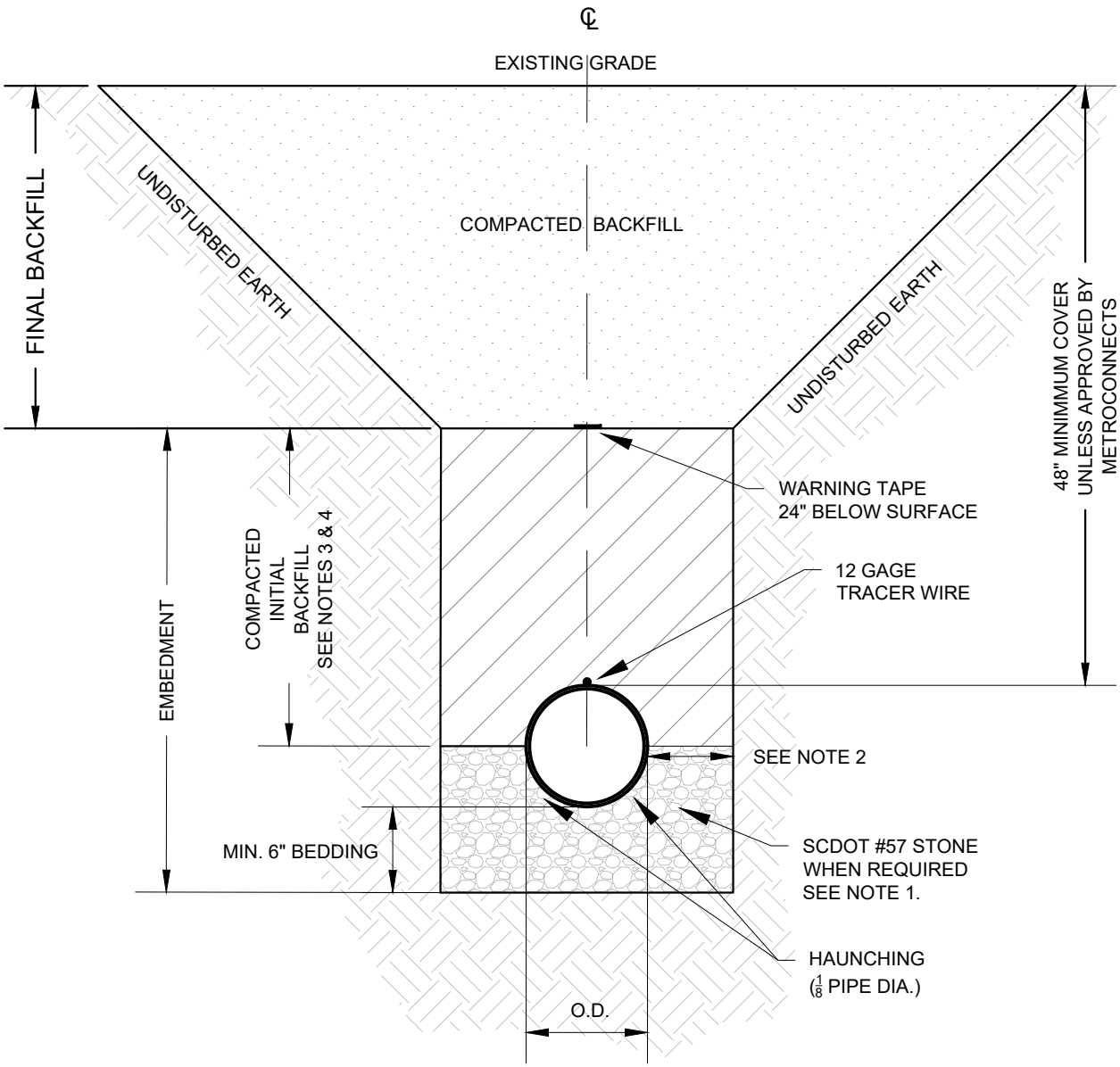


NOTES:

1. STABILIZATION STONE REQUIRED WHEN SOIL CONDITIONS ARE UNSTABLE OR IF TRENCH IS CUT THROUGH SOLID ROCK.
2. CLEAR DISTANCE NOT LESS THAN 6" EACH SIDE.
3. 18" MINIMUM VERTICAL TRENCH WALL ABOVE TOP OF PIPE.
4. INITIAL BACKFILL SHALL BE PLACED IN 6" LIFTS AND COMPACTED. INITIAL BACKFILL SHALL CONTAIN NO MATERIAL OVER 1 1/2" IN DIAMETER, FROZEN LUMPS, OR DEBRIS.
5. ALL TRENCHES WITHIN THE ROADWAY SHALL BE COMPACTED TO 95% OF STANDARD PROCTOR DENSITY AND ALL OTHER TRENCHES SHALL BE COMPACTED TO 90% OF STANDARD PROCTOR DENSITY.

# FORCE MAIN PIPE EMBEDMENT - C900 / DIP UNSUITABLE SOIL OR ROCK

NTS

MetroConnects
Sustainable Wastewater Solutions

Metropolitan Sewer Subdistrict
120 Augusta Arbor Way
Greenville, South Carolina
864-277-4442
metroconnects.org

**PS-10.1**

Revision Date: January 1, 2023

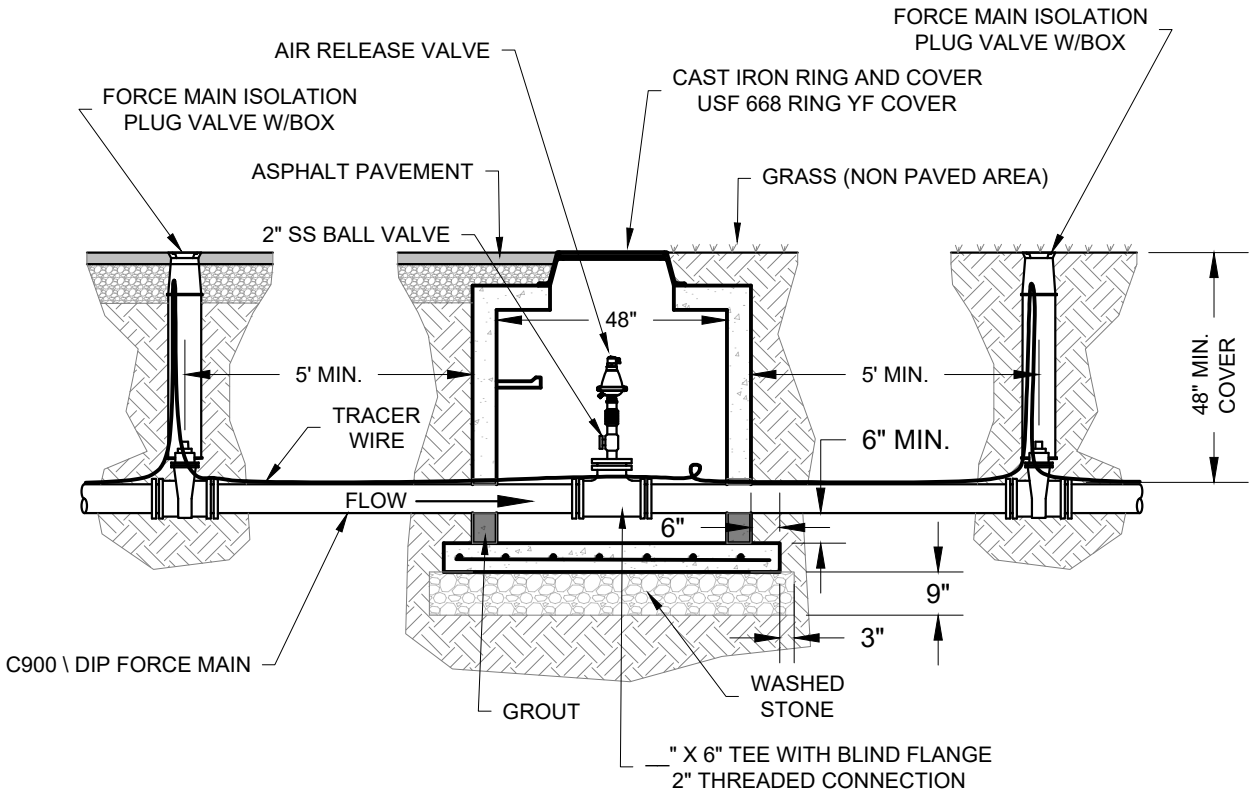


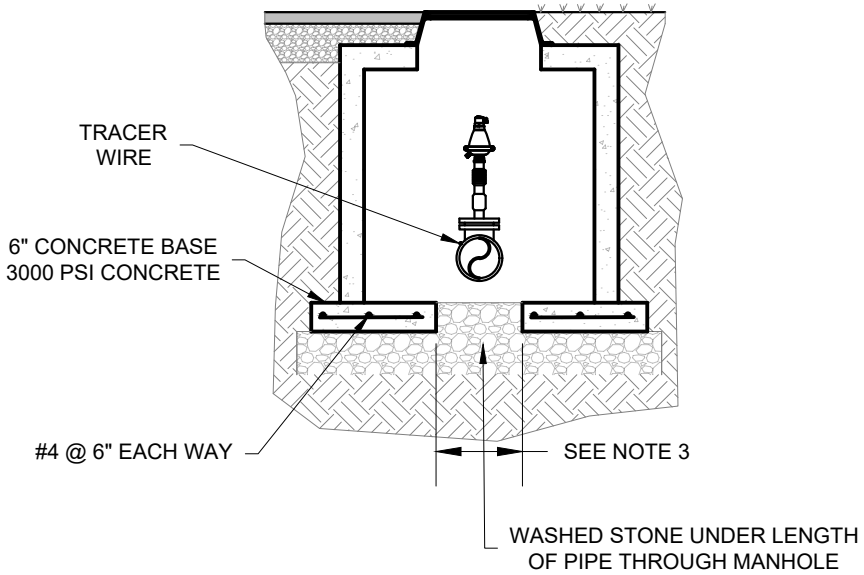


NOTES:
1. SEE STANDARD DETAIL SS-7.0 FOR MANHOLE REQUIREMENTS.
2. PLUG ISOLATION VALVE SHALL BE LOCATED ON UPSTREAM END OF THE AIR RELEASE VALVE.
3. WIDTH OF OPENING TO BE 1.5 TIMES DIAMETER OF FORCE MAIN.

NTS

# AIR / VACUUM RELEASE VALVE

MetroConnects
Sustainable Wastewater Solutions
Metropolitan Sewer Subdistrict
120 Augusta Arbor Way
Greenville, South Carolina
864-277-4442
metroconnects.org

**PS-11.0**

Revision Date: January 1, 2023

4" AND 6" PRIVATE FORCE MAINS ARE REQUIRED TO DISSIPATE ENERGY IN AN 8" C900 OR DIP LATERAL (1% MIN SLOPE) STARTING AT EDGE OF RIGHT OF WAY OR EASEMENT. ALL PRIVATE FORCE MAINS OVER 6" MUST GET APPROVAL FROM METROCONNECTS.

DOWNSTREAM MANHOLES WITHIN DISTANCE BELOW TO BE COATED

| FORCE MAIN SIZE | DISTANCE |
|---|---|
| 4" | 500 lf |
| 6" | 800 lf |
| 8" | 1,000 lf |
| >8" | 1,500 lf |

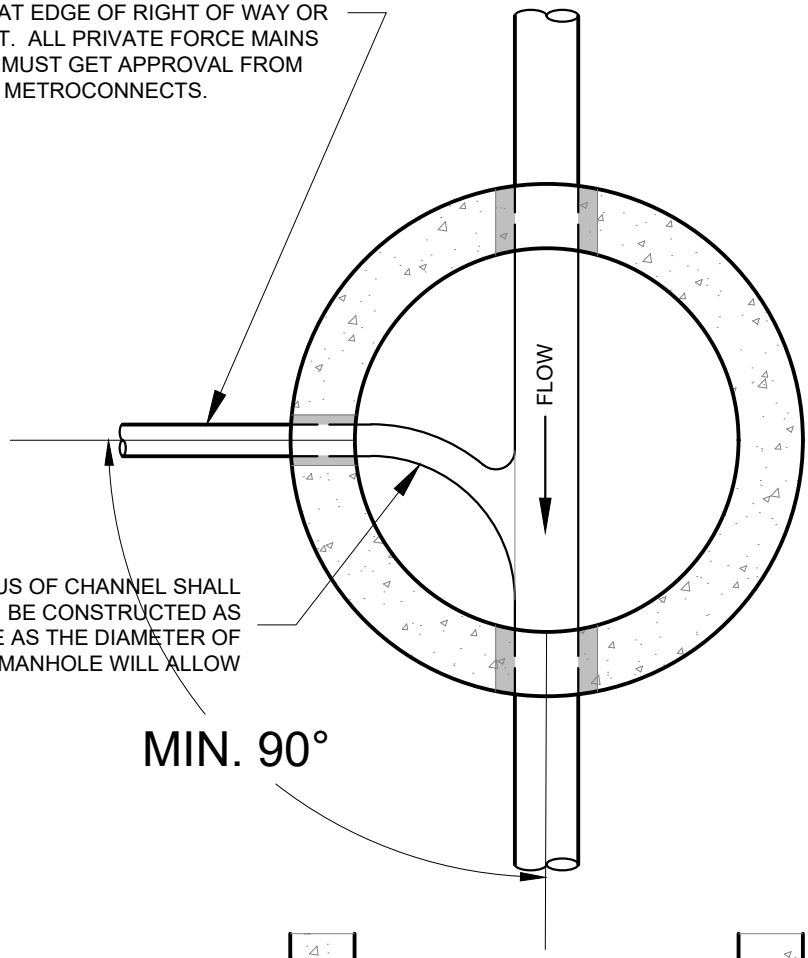


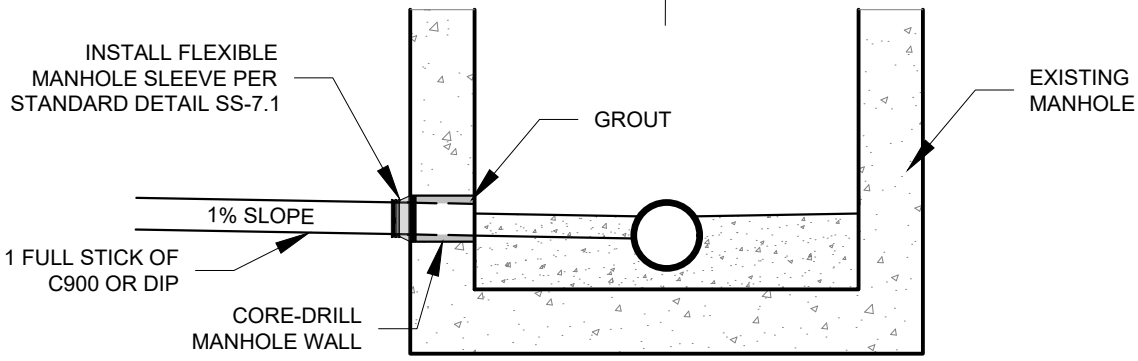


NOTES:
1. EXISTING MANHOLE SHALL BE REHABILITATED AND COATED WITH A CORROSION RESISTANT PROTECTIVE COATING.
2. SEE TABLE ABOVE OR SSS&P FOR DOWNSTREAM CORROSION RESISTANT REQUIREMENTS.
3. RESIDENTIAL GRINDER PUMP FORCE MAINS - SEE DETAIL SS-6.5.

# COMMERCIAL FORCE MAIN CONNECTION RECEIVING MANHOLE

NTS

MetroConnects
Sustainable Wastewater Solutions
Metropolitan Sewer Subdistrict
120 Augusta Arbor Way
Greenville, South Carolina
864-277-4442
metroconnects.org

**PS-12.0**

Revision Date: January 1, 2023

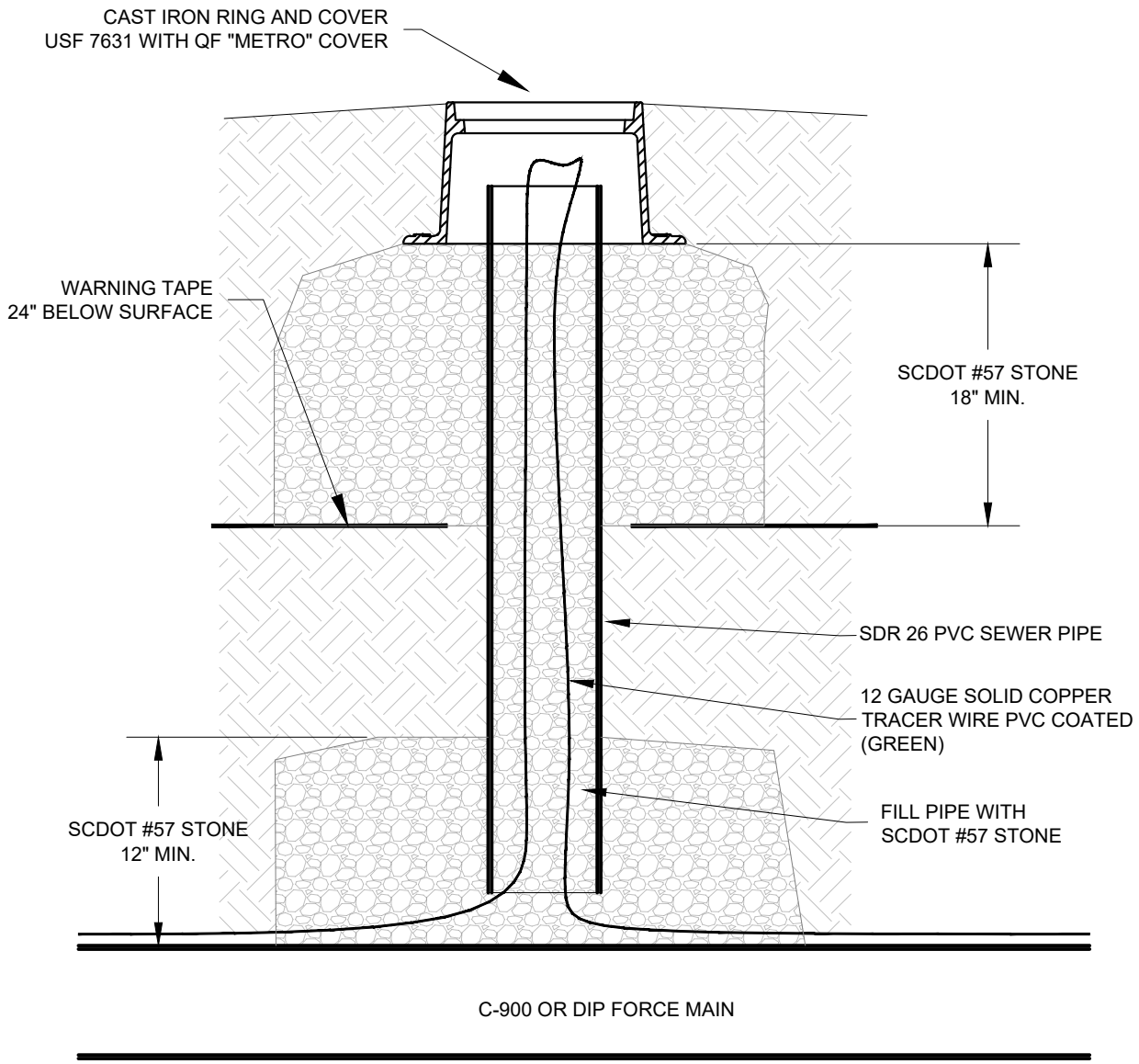


NOTES:
1. TRACER WIRE TO BE TAPED TO FORCE MAIN ON BELL SIDE OF EVERY JOINT WITH ADHESIVE TAPE (DUCT TAPE).
2. ALL BREAKS TO BE REPAIRED WITH WATERTIGHT CONNECTORS APPROVED FOR DIRECT BURIAL.
3. BOXES ARE NOT TO PLACED IN ASPHALT.

NTS

# TRACER WIRE BOX

MetroConnects
Sustainable Wastewater Solutions
Metropolitan Sewer Subdistrict
120 Augusta Arbor Way
Greenville, South Carolina
864-277-4442
metroconnects.org

**PS-13.0**

Revision Date: January 1, 2023

CONTROL PANEL INNER DOOR AND ENCLOSURE

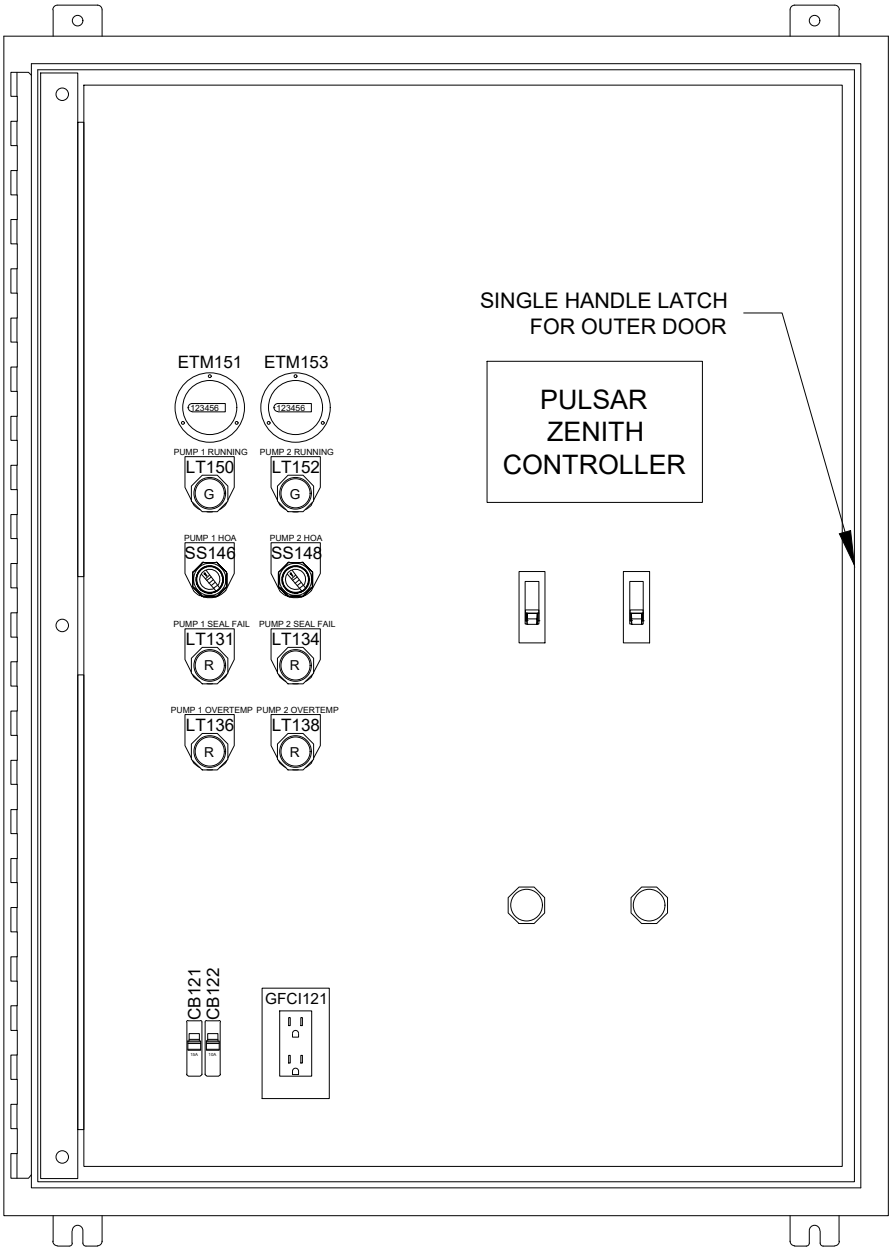


Remote mounted
Alarm Light and Horn

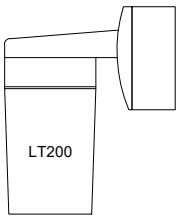


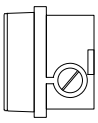

HN201

Alarm Silence located
on enclosure door
exterior.

Enclosure: 48"H x 36"W x 12"D
TYPE 4X

NTS

# PANEL DETAIL


MetroConnects
Sustainable Wastewater Solutions

Metropolitan Sewer Subdistrict
120 Augusta Arbor Way
Greenville, South Carolina
864-277-4442
metroconnects.org


**PS-14.0**

Revision Date: January 1, 2023

Control Power Panel

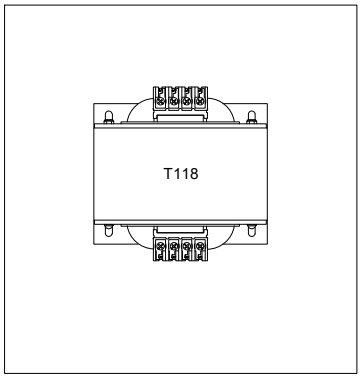


SUB PANEL

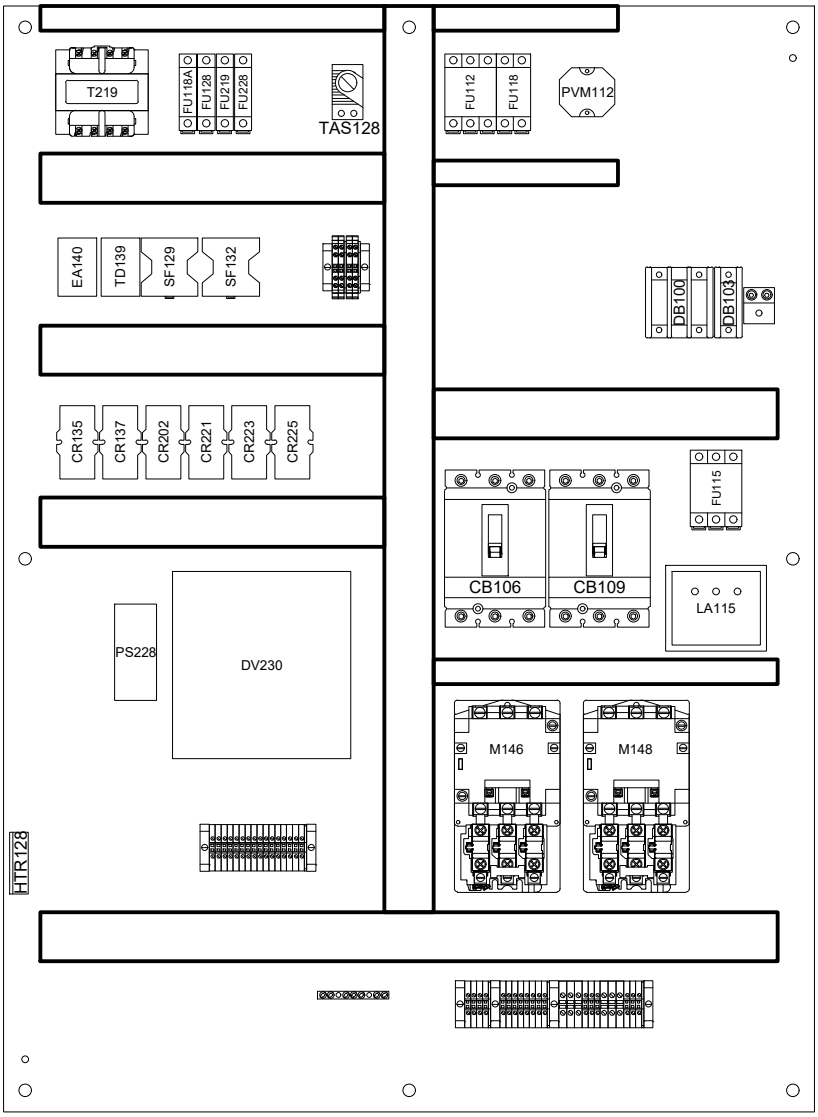


Panel: 45"H x 33"W

NTS

# PANEL DETAIL

MetroConnects
Sustainable Wastewater Solutions

Metropolitan Sewer Subdistrict
120 Augusta Arbor Way
Greenville, South Carolina
864-277-4442
metroconnects.org

**PS-14.1**

Revision Date: January 1, 2023